Addendum No. 1
DWM Sewer Improvement – Various Locations
P-2017-05
SPECIFICATION NO. 306235

For which bids will be opened in the office of the Department of Procurement Services, Room 103, Chicago, Illinois, 60602 on December 21, 2017 at 11:00 A.M. Central Time:

BIDDERS WILL ACKNOWLEDGE RECEIPT OF THIS ADDENDUM IN THE SPACE PROVIDED ON THE PROPOSAL PAGE

NOTICE OF ADDENDUM OF CONTRACT DOCUMENTS

ADDENDUM NUMBER 1

SECTION I: NOTICE OF REVISIONS/CHANGES

Change No. 1: Contract Plans, replace the following plan sheets:

- Summary of Quantities Sheet, revises quantity for Item Nos. 42, 103, 106 and 107
- Sheet 6 of 47 for PN 6498A
- Sheet 23of 47 for PN 6498A
- Sheet 36 of 51 for PN 6902
- Sheet 6 of 71 for PN 7012
- Sheet 15 of 71 for PN 7012
- Sheet 24 of 71 for PN 7012
- Sheet 1 of 31 for PN 7174
- Sheet 10 of 31 for PN 7174

Change No. 2: Contract Specification Book 2, replace pages 19 through 28.
This revision revises the approximate quantity Item Nos. 42, 103, 106 and 107 on the Schedule of Prices.

Change No. 3: Contract Specification Book 3, replace pages DS-76 through DS-82

End of Addendum #1

SUMMARY OF QUANTITIES

ITEM NO.	DESCRIPTION	UNIT	QTY
1	TREE REMOVAL (6 TO 15 UNITS DIAMETER)	UNIT	127
2	EARTH EXCAVATION	CU YD	2338
3	SPECIAL SOIL WASTE REMOVAL AND DISPOSAL	CU YD	12561
4	WASTE CHARACTERIZATION ANALYSIS	EACH	21
5	SOIL BORING	EACH	5
6	TRENCH BACKFILL	CU YD	22712
7	TOPSOIL FURNISH AND PLACE, 3"	SQ YD	10020
8	SEEDING, CLASS 2A	ACRE	2
9	NITROGEN FERTILIZER NUTRIENT	POUND	172
10	PHOSPHOROUS FERTILIZER NUTRIENT	POUND	172
11	POTASSIUM FERTILIZER NUTRIENT	POUND	172
12	EROSION CONTROL BLANKET	SQ YD	9270
13	SODDING, SALT TOLERANT	SQ YD	3015
14	SUBBASE GRANULAR MATERIAL, TYPE B 4"	SQ YD	560
15	SUBBASE GRANULAR MATERIAL, TYPE B 6"	SQ YD	24006
16	SUBBASE GRANULAR MATERIAL, TYPE B 8"	SQ YD	187
17	PORTLAND CEMENT CONCRETE BASE COURSE, VARIABLE DEPTH	CU YD	10752
18	PORTLAND CEMENT CONCRETE BASE COURSE, HES, VARIABLE DEPTH	CU YD	93
19	TEMPORARY COLD PATCH	TON	400
20	TEMPORARY STONE	TON	400
21	STABILIZATION STONE	TON	200
22	BITUMINOUS MATERIALS (TACK COAT)	POUND	7637
23	LEVELING BINDER (MACHINE METHOD), N30	TON	345
24	LEVELING BINDER (MACHINE METHOD), N70	TON	77
25	HOT-MIX ASPHALT BINDER COURSE, IL-19.0L, N30	TON	422
26	HOT-MIX ASPHALT SURFACE COURSE, IL-9.5L, MIX "C", N30	TON	4306
27	HOT-MIX ASPHALT SURFACE COURSE, MIX "D", N50	TON	125
28	HOT-MIX ASPHALT BINDER COURSE, MIX "D", N50	TON	125
29	HOT-MIX ASPHALT SURFACE COURSE, MIX "D", N70	TON	764
30	POLYMERIZED HOT-MIX ASPHALT SURFACE COURSE, MIX "E", N70	TON	36
31	HMA SPEED HUMPS	SQ YD	80
32	PORTLAND CEMENT CONCRETE PAVEMENT 10"	SQ YD	2466
33	PORTLAND CEMENT CONCRETE ALLEY/DRIVEWAY PAVEMENT, 8 INCH	SQ YD	200
34	BUS PAD, 10"	SQ YD	187
35	PROTECTIVE CONCRETE COAT	SQ YD	5076
36	SIDEWALK/DRIVEWAY, SPECIAL	SQ FT	47
37	PORTLAND CEMENT CONCRETE SIDEWALK, 5 INCH	SQ FT	6360
38	PORTLAND CEMENT CONCRETE SIDEWALK, 8 INCH	SQ FT	1910
39	PORTLAND CEMENT CONCRETE ADA RAMP, 5 INCH	SQ FT	6987
40	PORTLAND CEMENT CONCRETE ADA RAMP, 8 INCH	SQ FT	641
41	DETECTABLE WARNING TILES, LINEAR (CAST IRON)	SQ FT	1210
42	PAVEMENT SURFACE REMOVAL, 2" AND LESS	SQ YD	25898
43	PAVEMENT REMOVAL	SQ YD	5521
44	DRIVEWAY/ALLEY PAVEMENT REMOVAL	SQ YD	204
45	CURB REMOVAL	FOOT	148
46	COMBINATION CURB AND GUTTER REMOVAL	FOOT	6268
47	SIDEWALK REMOVAL	SQ FT	13515
48	CONCRETE STRUCTURES	CU YD	15
49	REINFORCEMENT BARS, EPOXY COATED	POUND	13561
50	CONCRETE COLLAR	CU YD	200
51	SEWER, 48", CLASS III, REINFORCED CONCRETE PIPE, IN OPEN CUT	FOOT	623
52	SEWER, 42", CLASS III, REINFORCED CONCRETE PIPE, IN OPEN CUT	FOOT	665
53	SEWER, 36", CLASS IV, REINFORCED CONCRETE PIPE, IN OPEN CUT	FOOT	5
54	SEWER, 36", CLASS III, REINFORCED CONCRETE PIPE, IN OPEN CUT	FOOT	1623
55	SEWER, 30", CLASS III, REINFORCED CONCRETE PIPE, IN OPEN CUT	FOOT	1677
56	SEWER, 30", CLASS III, REINFORCED CONCRETE ARCH PIPE, IN OPEN CUT	FOOT	7
57	SEWER, 24", CLASS III, REINFORCED CONCRETE PIPE, IN OPEN CUT	FOOT	3671
58	SEWER, 18", VITRIFIED CLAY PIPE, IN OPEN CUT	FOOT	48
59	SEWER, 12", VITRIFIED CLAY PIPE, IN OPEN CUT	FOOT	114
60	SEWER, 36", DUCTILE IRON PIPE, IN OPEN CUT	FOOT	21
61	SEWER, 24", DUCTILE IRON PIPE, IN OPEN CUT	FOOT	41
62	SEWER, 18", DUCTILE IRON PIPE, IN OPEN CUT	FOOT	70
63	SEWER, 10", DUCTILE IRON PIPE, IN OPEN CUT	FOOT	40
64	TUMBLING BASIN, 60-INCH DIAMETER BETWEEN S AVALON AV AND S WOODLAWN AV, PRECAST CONCRETE	LSUM	1
65	TUMBLING BASIN, 60-INCH DIAMETER BETWEEN S WOODLAWN AV AND S UNIVERSITY AV, PRECAST CONCRETE	LSUM	1
66	TUMBLING BASIN, 60-INCH DIAMETER BETWEEN S UNIVERSITY AV AND S GREENWOOD AV, PRECAST CONCRETE	LSUM	1
67	TUMBLING BASIN, 60-INCH DIAMETER BETWEEN S GREENWOOD AV AND S DOBSON AV, PRECAST CONCRETE	LSUM	1
68	TUMBLING BASIN, 60-INCH DIAMETER BETWEEN S DOBSON AV AND S ELLIS AV, PRECAST CONCRETE	LSUM	1
69	TUMBLING BASIN, 60-INCH DIAMETER BETWEEN S AVALON AV AND S WOODLAWN AV IN MEDIAN, PRECAST CONCRETE	LSUM	1
70	TUMBLING BASIN, 60-INCH DIAMETER BETWEEN S WOODLAWN AV AND S UNIVERSITY AV IN MEDIAN, PRECAST CONCRETE	LSUM	1
71	TUMBLING BASIN, 60-INCH DIAMETER BETWEEN S UNIVERSITY AV AND S GREENWOOD AV IN MEDIAN, PRECAST CONCRETE	LSUM	1
72	TUMBLING BASIN, 60-INCH DIAMETER BETWEEN S GREENWOOD AV AND S DOBSON AV IN MEDIAN, PRECAST CONCRETE	LSUM	1
73	TUMBLING BASIN, 60-INCH DIAMETER BETWEEN S DOBSON AV AND S ELLIS AV IN MEDIAN, PRECAST CONCRETE	LSUM	1
74	CONNECTION STRUCTURE AT E 92ND PL AND S COTTAGE GROVE AV, CAST-IN-PLACE CONCRETE	LSUM	1
75	JUNCTION STRUCTURE ON E 95TH ST	LSUM	1
76	UNDERGROUND STORAGE STRUCTURE ON E 95TH ST	FOOT	582
77	UNDERGROUND STORAGE STRUCTURE NO. 1 BETWEEN S AVALON AV AND S WOODLAWN AV	LSUM	1
78	UNDERGROUND STORAGE STRUCTURE NO. 2 BETWEEN S WOODLAWN AV AND S UNIVERSITY AV	LSUM	1
79	UNDERGROUND STORAGE STRUCTURE NO. 3 BETWEEN S UNIVERSITY AV AND S GREENWOOD AV	LSUM	1
80	UNDERGROUND STORAGE STRUCTURE NO. 4 BETWEEN S GREENWOOD AV AND S DOBSON AV	LSUM	1
81	UNDERGROUND STORAGE STRUCTURE NO. 5 BETWEEN S DOBSON AV AND S ELLIS AV	LSUM	1
82	DRAIN CONNECTION, 72", REINFORCED CONCRETE PIPE	FOOT	8
83	DRAIN CONNECTION, 30", REINFORCED CONCRETE PIPE	FOOT	91
84	DRAIN CONNECTION, 21", VITRIFIED CLAY PIPE	FOOT	7
85	DRAIN CONNECTION, 18", VITRIFIED CLAY PIPE	FOOT	8
86	DRAIN CONNECTION, 15", VITRIFIED CLAY PIPE	FOOT	103
87	DRAIN CONNECTION, 12", VITRIFIED CLAY PIPE	FOOT	194
88	DRAIN CONNECTION, 10", VITRIFIED CLAY PIPE	FOOT	65
89	DRAIN CONNECTION, 8", VITRIFIED CLAY PIPE	FOOT	793
90	DRAIN CONNECTION, 6", VITRIFIED CLAY PIPE	FOOT	775

ITEM NO.	DESCRIPTION	UNIT	QTY
91	DRAIN CONNECTION, 12", DUCTILE IRON PIPE	FOOT	20
92	DRAIN CONNECTION, 10", DUCTILE IRON PIPE	FOOT	45
93	DRAIN CONNECTION, 8", DUCTILE IRON PIPE	FOOT	1240
94	DRAIN CONNECTION, 6", DUCTILE IRON PIPE	FOOT	105
95	CATCH BASINS, 4'-DIAMETER	EACH	98
96	MANHOLES, TYPE A, 3'-DIAMETER	EACH	7
97	MANHOLES, TYPE A, 4'-DIAMETER	EACH	1
98	MANHOLES, TYPE B, 3'-DIAMETER	EACH	23
99	MANHOLES, TYPE B, 4'-DIAMETER	EACH	1
100	MANHOLES, TYPE B MODIFIED, 3'-DIAMETER	EACH	1
101	MANHOLES, TYPE B MODIFIED, 4'-DIAMETER	EACH	2
102	MANHOLES, TYPE C DOUBLE-DROP, 3'-DIAMETER	EACH	1
103	PRECAST MANHOLE RISER	VERT FT	84
104	PRECAST CONCRETE FLAT SLAB TOP	EACH	2
105	INLETS	EACH	30
106	CHICAGO STANDARD FRAMES	EACH	192
107	CHICAGO STANDARD LIDS	EACH	192
108	GRATES, TYPE 8	EACH	20
109	CATCH BASINS TO BE CLEANED	EACH	33
110	MANHOLES TO BE CLEANED	EACH	2
111	VALVE VAULTS TO BE CLEANED	EACH	1
112	CATCH BASINS TO BE ADJUSTED	EACH	14
113	MANHOLES TO BE ADJUSTED	EACH	13
114	INLETS TO BE ADJUSTED	EACH	1
115	VALVE VAULTS TO BE ADJUSTED	EACH	22
116	VALVE BOXES TO BE ADJUSTED	EACH	2
117	FILLING MANHOLES	EACH	3
118	FILLING CATCH BASINS	EACH	69
119	REMOVING INLETS	EACH	21
120	CONTROLLED LOW-STRENGTH MATERIAL (CLSM)	CU YD	34
121	COMBINATION CONCRETE CURB AND GUTTER, TYPE B-V.12	FOOT	6598
122	CONCRETE CURB, TYPE B	EACH	1036
123	FLAP GATE 12"	EACH	5
124	ENGINEER'S FIELD OFFICE	CAL MO	17
125	MOBILIZATION	LSUM	1
126	TRAFFIC CONTROL AND PROTECTION	CAL DAY	505
127	PROJECT SIGNS	EACH	5
128	CHANGEABLE MESSAGE SIGN	CAL DAY	126
129	DRILL AND GROUT DOWEL/TIE BARS	EACH	7521
130	TEMPORARY PAVEMENT MARKING - LINE 4"	FOOT	4375
131	TEMPORARY CONCRETE BARRIER	FOOT	1287
132	RELOCATE TEMPORARY CONCRETE BARRIER	FOOT	5593
133	IMPACT ATTENUATORS, TEMPORARY (NON-REDIRECTIVE), TEST LEVEL 2	EACH	1
134	IMPACT ATTENUATORS, TEMPORARY (FULLY REDIRECTIVE, NARROW), TEST LEVEL 3	EACH	2
135	IMPACT ATTENUATORS, RELOCATE (FULLY REDIRECTIVE, NARROW), TEST LEVEL 3	EACH	6
136	THERMOPLASTIC PAVEMENT MARKING - LETTERS AND SYMBOLS	SQ FT	77
137	THERMOPLASTIC PAVEMENT MARKING - LINE 4"	FOOT	6296
138	THERMOPLASTIC PAVEMENT MARKING - LINE 6"	FOOT	1032
139	THERMOPLASTIC PAVEMENT MARKING - LINE 12"	FOOT	842
140	THERMOPLASTIC PAVEMENT MARKING - LINE 24"	FOOT	1978
141	PAVEMENT MARKING REMOVAL	SQ FT	1956
142	TRENCH AND BACKFILL FOR 2-4 DUCTS	FOOT	570
143	ELECTRICAL MANHOLE 3'X4'X4' WITH 30" FRAME AND LID	EACH	2
144	DRILL EXISTING MANHOLE OR HANDHOLE	EACH	1
145	CLEAN EXISTING ELECTRICAL MANHOLE OR HANDHOLE	EACH	2
146	PVC CONDUIT IN DUCT, CONCRETE ENCASED, 4-3"	FOOT	570
147	ROD AND CLEAN DUCT IN EXISTING CONDUIT SYSTEM	FOOT	1380
148	INTERCEPT EXISTING CONDUIT	EACH	4
149	PULL AND REINSTALL ELECTRIC CABLE FROM CONDUIT	FOOT	3839
150	BREAKDOWN MANHOLE IN PAVEMENT	EACH	1
151	TREE INSTALLATION	EACH	51
152	MAINTAIN EXISTING LIGHTING SYSTEM	LSUM	1
153	MAINTAIN EXISTING TRAFFIC SIGNAL, INTERSECTION OF E 95TH ST AND S COTTAGE GROVE AVE (NORTH LEG)	EACH	1
154	MAINTAIN EXISTING TRAFFIC SIGNAL, INTERSECTION OF E 95TH ST AND S COTTAGE GROVE AVE (SOUTH LEG)	EACH	1
155	TEMPORARY WATER MAIN SUPPORT STRUCTURE - TYPE III	EACH	15
156	TEMPORARY WATER MAIN SUPPORT STRUCTURE - TYPE II, 16"	EACH	1
157	CUT, CAP, AND REPLACE EXISTING WATER MAIN FOR UTILITY INSTALLATION, 6-INCH	EACH	1
158	CUT, CAP, AND REPLACE EXISTING WATER MAIN FOR UTILITY INSTALLATION, 8-INCH	EACH	4
159	CUT, CAP, AND REPLACE EXISTING WATER MAIN FOR UTILITY INSTALLATION, 12-INCH	EACH	2
160	WATER MAIN INSTALLED IN OPEN CUT, 8-INCH	FOOT	40
161	WATER MAIN INSTALLED IN OPEN CUT, 12-INCH	FOOT	20
162	VALVE INSTALLATION - 8-INCH	EACH	1
163	RESILIENT WEDGE VALVE - 8-INCH	EACH	1
164	8-INCH TO 12-INCH CONNECTION TO 36-INCH - 42-INCH: REMOVE AND REPLACE EXISTING TAPPING CONNECTION SLEEVE	EACH	1
165	WATER SERVICE TO BE ADJUSTED	EACH	1
166	CHECK VALVE	EACH	1
167	SPECIAL FRAME AND LID	EACH	9
168	RAILROAD TRACK REMOVAL	SQ YD	125
169	ABANDON MANHOLE	EACH	5

PERCENT COMPLETE	DATE
30	
60	
75	
90	
100	8/24/17
⚠ ADDENDUM NO. 1	12/5/17

CITY OF CHICAGO
DEPARTMENT OF WATER MANAGEMENT
BUREAU OF ENGINEERING SERVICES

SUMMARY OF QUANTITIES

DRAWN: ARH
DESIGNED:
CHECKED: ALG
REVIEWED: WLS

P-2017-05

X:\0100s\0146.30\P-2017-05\Bid Package Documents\P-2017-05-SHT-S00.dgn
12/4/2017

P-2017-05-SHT-S00.dgn 12/4/2017 2:02:03 PM

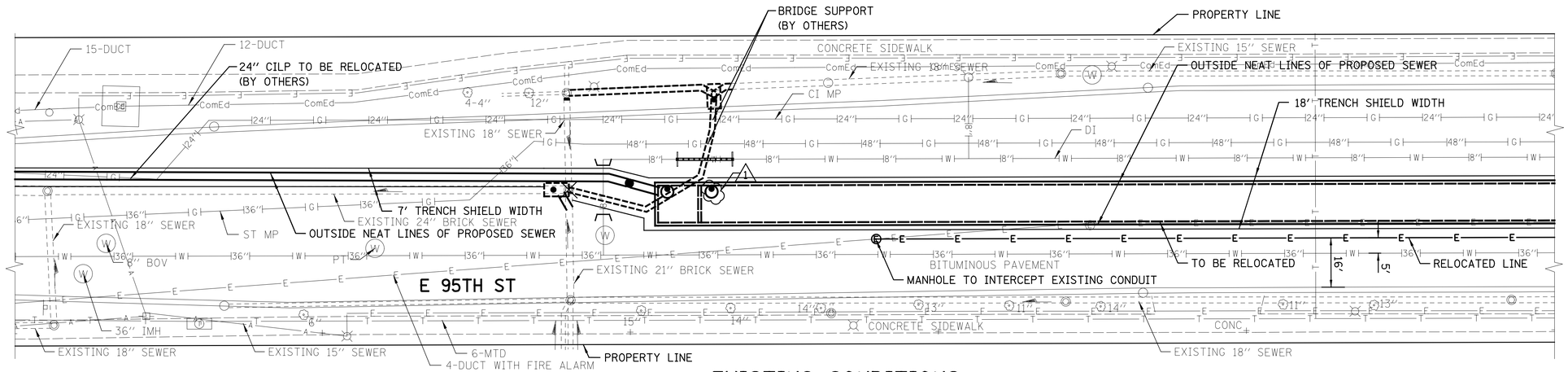

EXISTING CONDITIONS

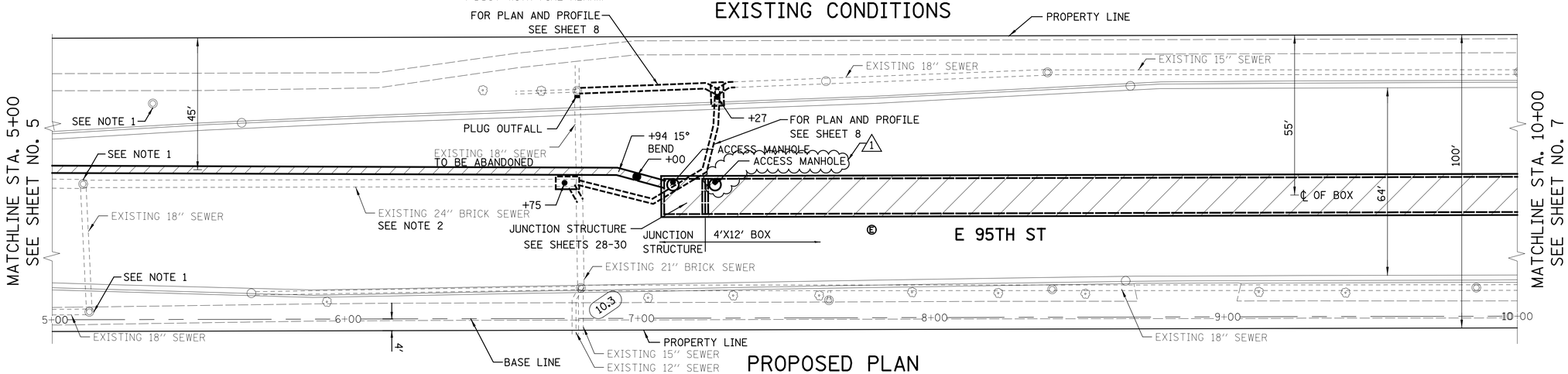

PROPOSED PLAN

NOTES:

1. REMOVE AND REPLACE EXISTING FRAME AND LID WITH WATERTIGHT BOLT-DOWN FRAME AND LID
2. EXISTING 24" RCP SEWER TO REMAIN

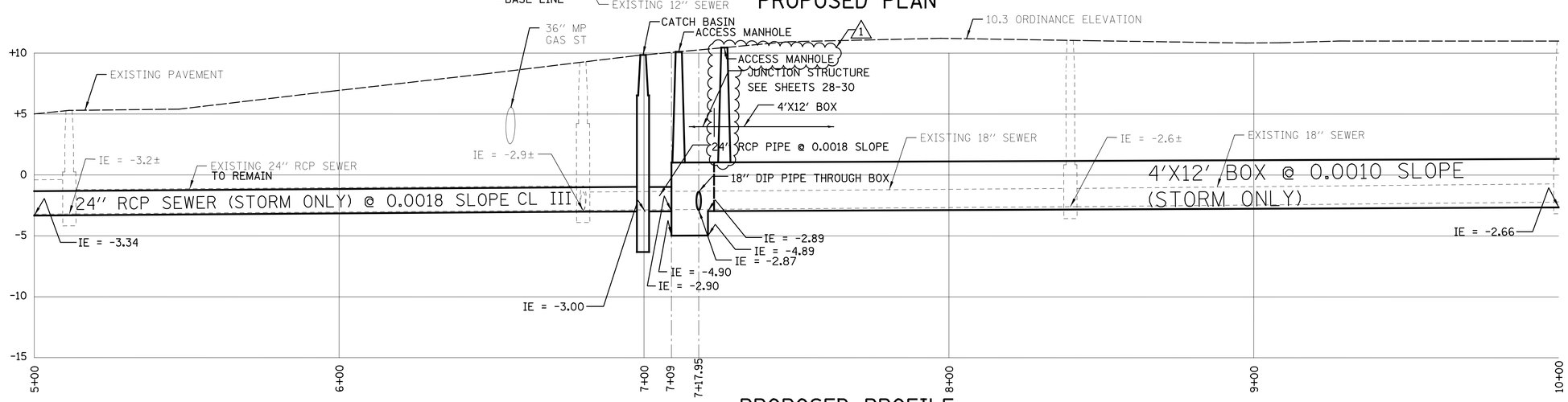

PROPOSED PROFILE

HORIZONTAL SCALE 1 inch = 20 ft.

VERTICAL SCALE 1 inch = 5 ft.

PERCENT COMPLETE	DATE
30	5/15/15
60	9/21/15
75	4/28/16
90	12/19/16
100	8/1/17
⚠ ADDENDUM NO. 1	12/5/17

CITY OF CHICAGO
DEPARTMENT OF WATER MANAGEMENT
BUREAU OF ENGINEERING SERVICES

PLAN AND PROFILE
E 95TH STREET

DRAWN: ALG
DESIGNED: ALG
CHECKED: WLS
REVIEWED: WLS
OUC #2016-70861
6 OF 47
PN 6498A

X:\0\00s\0046.30\Eng Docs\Roadway\CDWM6498A-SHT-PLNPRF02.dgn
12/4/2017

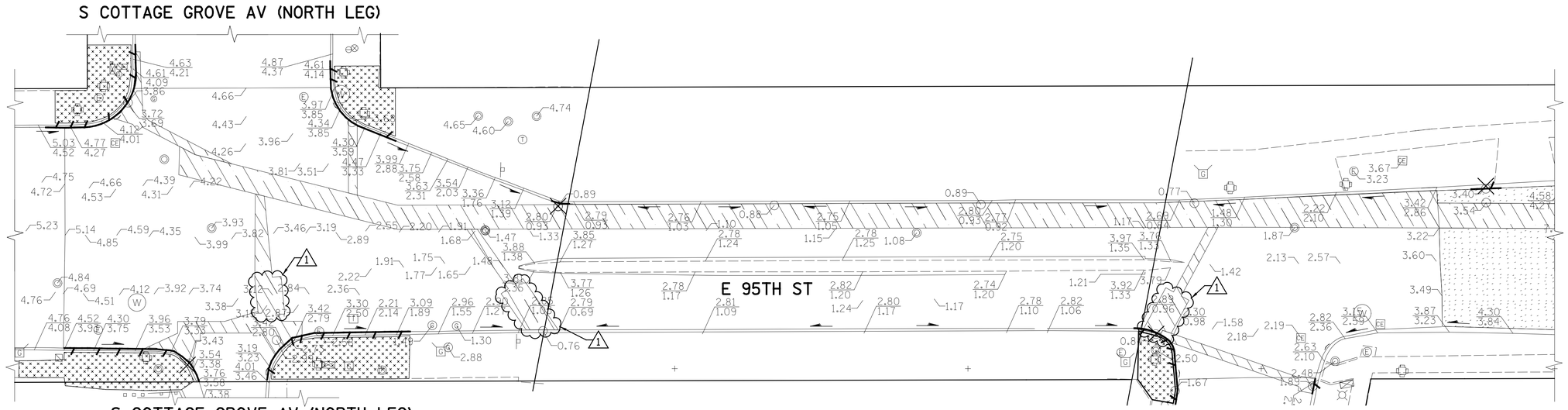

EXISTING ELEVATIONS / REMOVAL PLAN

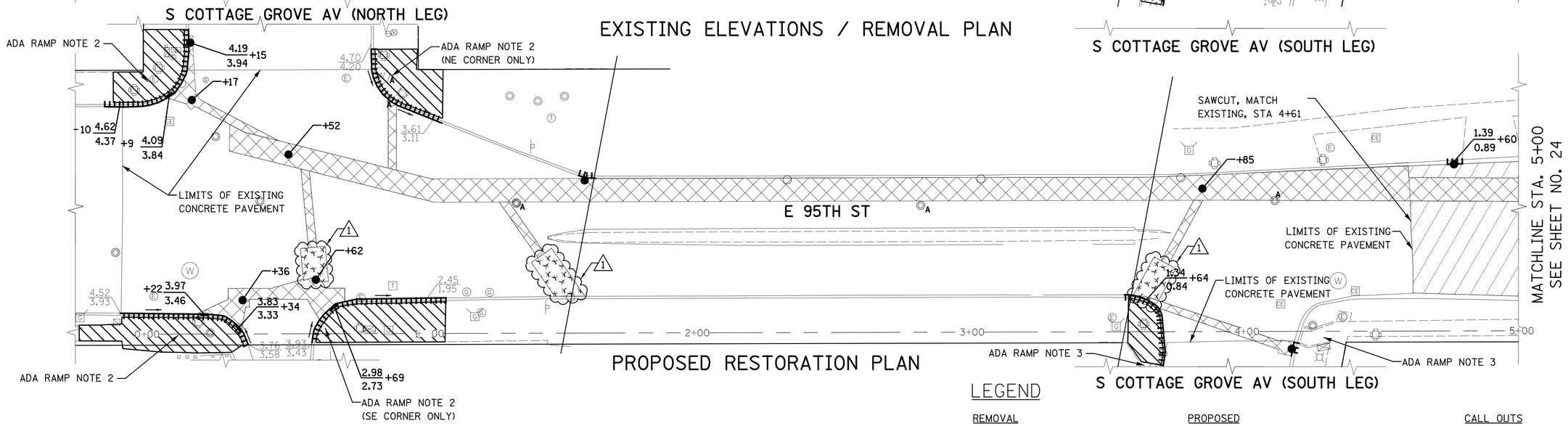

PROPOSED RESTORATION PLAN

LEGEND

REMOVAL

- FULL DEPTH PAVEMENT REMOVAL
- SURFACE COURSE REMOVAL
- SIDEWALK/DRIVEWAY REMOVAL
- CURB AND GUTTER REMOVAL

PROPOSED

- FULL DEPTH PAVEMENT RECONSTRUCTION
- BITUMINOUS RESURFACING
- DRIVEWAY / ALLEY RECONSTRUCTION
- SIDEWALK REPLACEMENT
- CURB AND GUTTER REPLACEMENT
- STRUCTURAL SLAB SEE SHEETS 31-32

CALL OUTS

- 5.63 / 5.38 — PROPOSED TOP OF CURB ELEV. / PROPOSED GUTTER ELEV.
- 5.64 — EXISTING ELEVATION
- 5.68 / 5.30 — EXISTING TOP OF CURB ELEV. / EXISTING GUTTER ELEV.
- STRUCTURE TO BE REMOVED
- A — ADJUST FRAME & LID
- PROPOSED CATCH BASIN
- PROPOSED FRAME & LID
- DIRECTION OF FLOW
- SUMMIT

NOTES:

1. THE EXTENT OF PAVEMENT RESTORATION MUST NOT EXCEED THE LIMITS SHOWN IN THIS DRAWING OR AS DIRECTED BY THE COMMISSIONER.

2. CONSTRUCTION OF NEW PAVEMENTS, CONCRETE SIDEWALKS, CURBS, GUTTERS, ALLEY RETURNS, AND DRIVEWAYS MUST CONFORM TO THE LATEST REGULATIONS FOR OPENINGS, CONSTRUCTION, AND REPAIR OF THE CHICAGO DEPARTMENT OF TRANSPORTATION AND AS ORDERED BY THE COMMISSIONER.

3. SEE CHICAGO DEPARTMENT OF TRANSPORTATION ADA CONSTRUCTION STANDARDS FOR ADA RAMP DESIGN.

4. ADJUST ROADWAY CENTERLINE ELEVATION TO ACHIEVE COMPLIANT CROSS SLOPES.

5. ROADWAY GRADES AND CROSS SLOPES TO PROMOTE ADEQUATE DRAINAGE AND MITIGATE WATER PONDING IN THE STREET TO BE DETERMINED IN THE FIELD DURING CONSTRUCTION. ANY CHANGE IN PARTIAL OR FULL RESTORATION SHOULD BE VERIFIED WITH DESIGN SECTION BEFORE CONSTRUCTION.

ADA RAMP NOTES

1. STANDARD DESIGN
2. SPECIAL DESIGN
3. EXISTING RAMP PASSES - DO NOT REMOVE
4. INSTALL ADA RAMP TILE

HORIZONTAL SCALE — 1 inch = 20 ft. (20 0 10 20 40 80)

PERCENT COMPLETE	DATE
30	5/15/15
60	9/21/15
75	4/28/16
90	12/19/16
100	8/1/17
⚠ ADDENDUM NO. 1	12/5/17

CITY OF CHICAGO
DEPARTMENT OF WATER MANAGEMENT
BUREAU OF ENGINEERING SERVICES

PAVEMENT RESTORATION
E 95TH STREET

DRAWN: ALG
DESIGNED: ALG
CHECKED: WLS
REVIEWED: WLS

OUC #2016-70861

PN 6498A

X:\0100s\0146.30\Eng Docs\Roadway\CDWM6498A-SHT-RESTORE01.dgn
12/4/2017

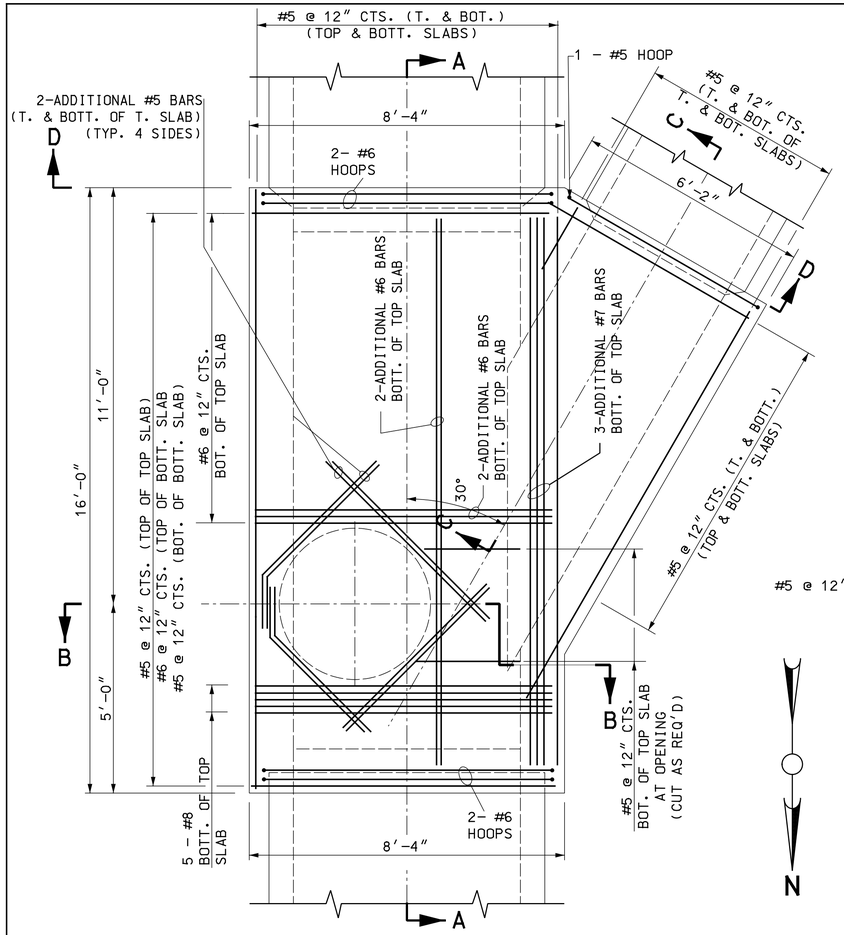

PLAN

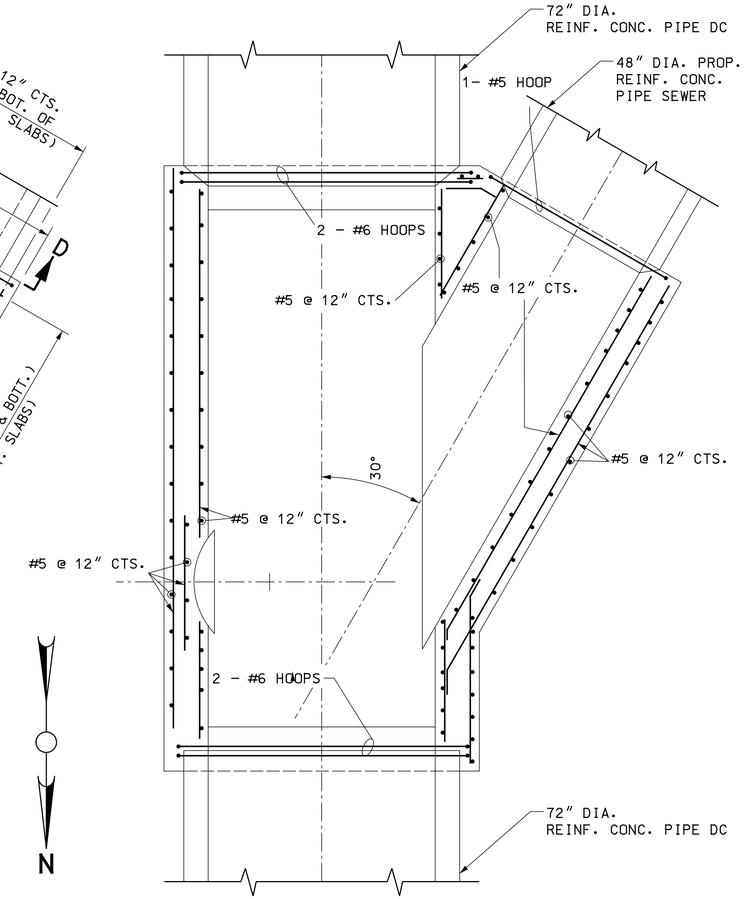

SECTIONAL PLAN

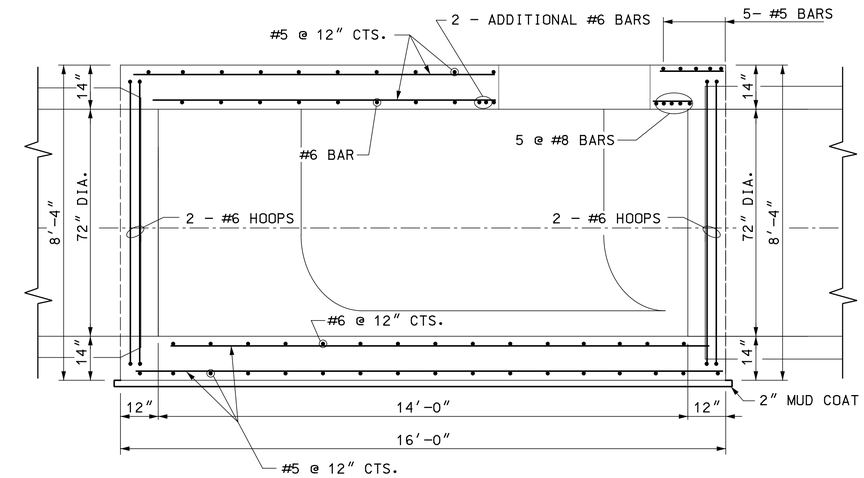

SECTION A-A

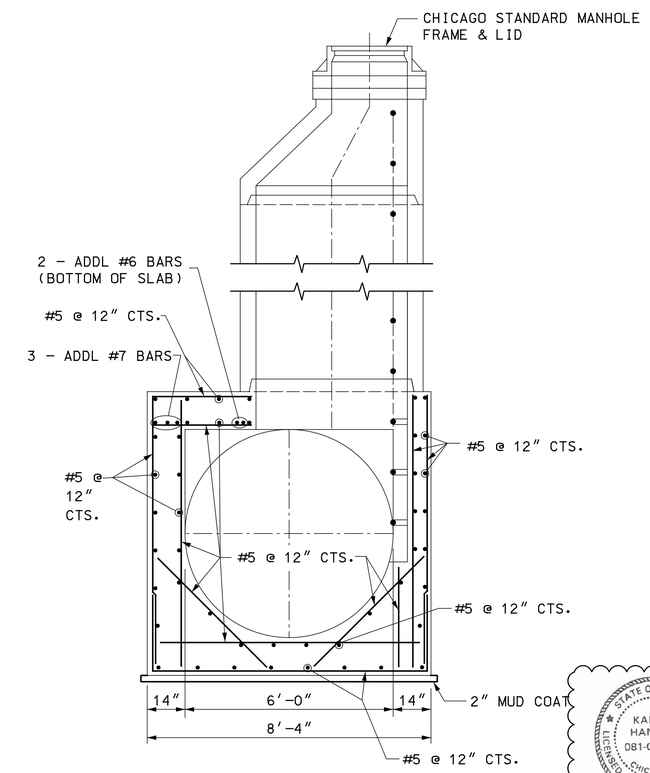

SECTION B-B

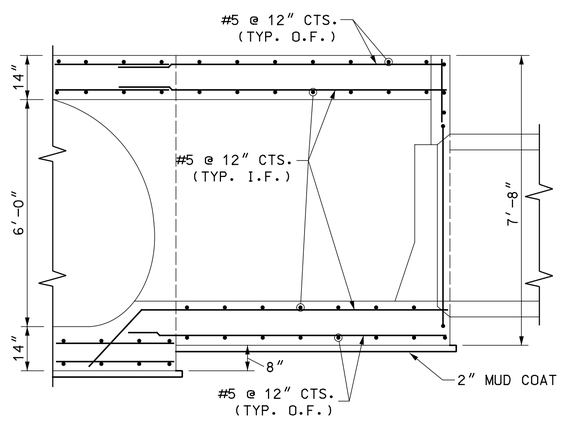

SECTION C-C

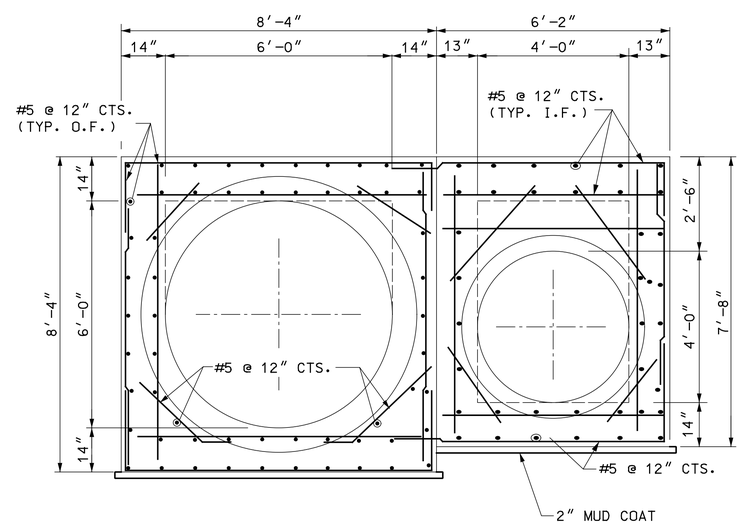

ELEVATION D-D

HORIZONTAL & VERTICAL SCALE 1/2" = 1'-0"

2 0 1 2 4 8

STATE OF ILLINOIS
KARL J. HANSON
081-004642
LICENSED PROFESSIONAL ENGINEER
CHICAGO, IL
Karl J. Hanson
Exp. 11-30-18

1

PERCENT COMPLETE	DATE
30	9/22/15
60	11/25/15
75	2/25/16
90	6/22/16
100	11/17/16
1 ADDENDUM NO. 1	12/5/17

CITY OF CHICAGO
DEPARTMENT OF WATER MANAGEMENT
BUREAU OF ENGINEERING SERVICES

REINFORCEMENT FOR
CONNECTION STRUCTURE
AT E 92ND PL &
S COTTAGE GROVE AV

DRAWN: JRD
DESIGNED: JDW
CHECKED: MBL
REVIEWED:

OUC # 2016-69988

36 OF 51

PN 6902

P:\5868 - CDWM\5868-01-003 (ENG) - CDWM TOR #16-05\Engineering\PN 6902\400 Design\402 CADD Sheets\CDWM6902-sht-sewerdet-junction-structural.dgn
12/1/2017

NOTES:

1. SEE INDIVIDUAL PLAN AND PROFILES OF TANKS, SHEETS 7 THRU 11, FOR ELEVATIONS OF STRUCTURES.
2. SEE INDIVIDUAL PLANS, SHEETS 16 THRU 20, FOR RIM ELEVATIONS AND GRADING PLANS.
3. TANK STORAGE VOLUMES TO BE 38,250± CF FOR TANKS 1-4 31,540± CF FOR TANK 5
4. TANK FLOOR SHALL FLOW FREELY TOWARDS THE CHANNEL WITHOUT BLOCKAGE FROM INTERMEDIATE STRUCTURAL MEMBERS. INTERMEDIATE SUPPORTS ARE ALLOWED, BUT MUST BE ORIENTED PARALLEL TO FLOW DIRECTION SHOWN. (1)
5. NON-SHRINK GROUT SHALL BE PLACED ON TANK FLOOR AS NEED TO PROVIDE 1.0% SLOPE TOWARDS CHANNEL.

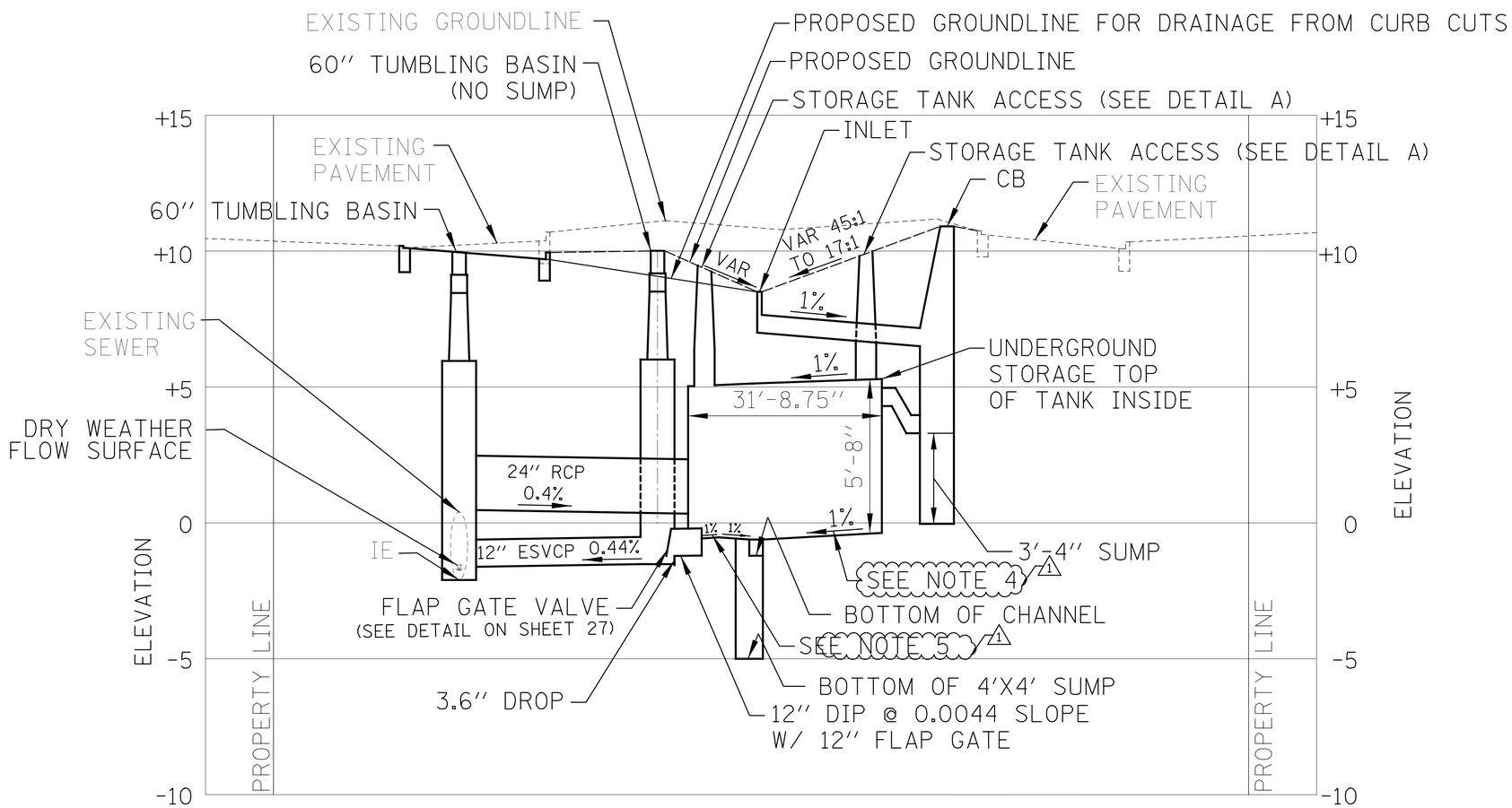

SECTION B-B

(SEE PLAN AND PROFILE SHEETS FOR INFORMATION SPECIFIC TO EACH TANK)

TYPICAL STORAGE TANK SYSTEM CROSS-SECTION

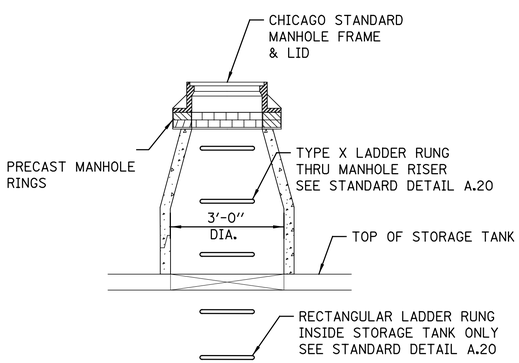

DETAIL A

PERCENT COMPLETE	DATE
30	5/27/15
60	7/28/15
75	9/1/15
90	9/1/16
100	8/1/17
(1) ADDENDUM NO. 1	12/5/17

CITY OF CHICAGO
DEPARTMENT OF WATER MANAGEMENT
BUREAU OF ENGINEERING SERVICES

STORAGE TANK TYPICAL
E 97TH STREET
S AVALON AV TO
S WOODLAWN AV

DRAWN: ALG
DESIGNED: ALG
CHECKED: WLS
REVIEWED: WLS

PN 7012

Y:\chicago\0100S\0146.19\Eng_Docs\Roadway\CDWM7012-SHT-DETAIL01.dgn
12/5/2017

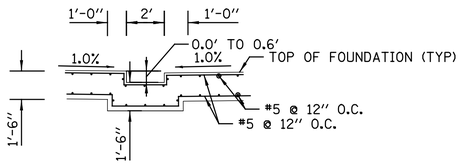

DETAIL A

TRENCH SIZING BASED ON TANK DRAWINGS

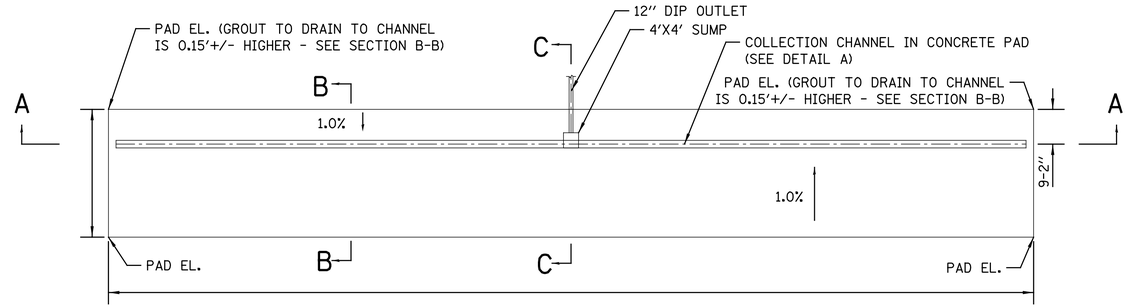

PLAN VIEW

SEE PLAN AND PROFILE OF EACH TANK FOR ELEVATIONS AND OVERALL DIMENSIONS

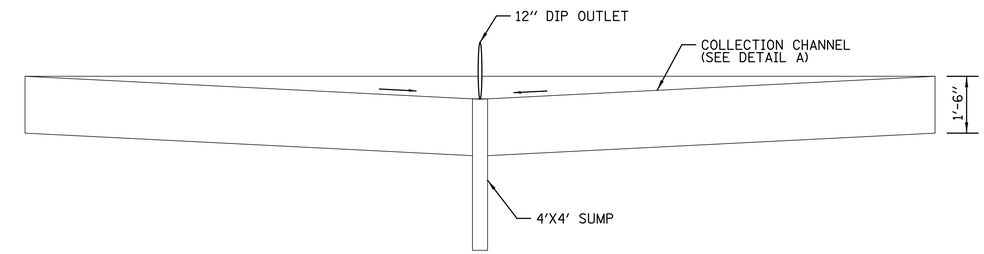

SECTION A-A

SEE PLAN AND PROFILE OF EACH TANK FOR COLLECTION CHANNEL SLOPES

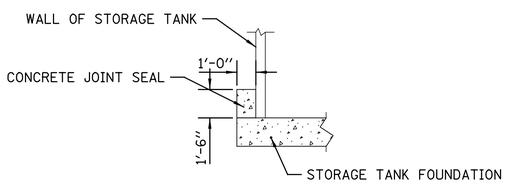

JOINT SEAL DETAIL

TO BE PLACED AROUND THE PERIMETER OF THE STORAGE TANK

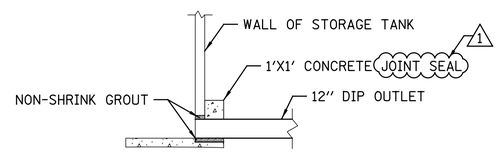

PIPE CONCRETE JOINT SEAL DETAIL

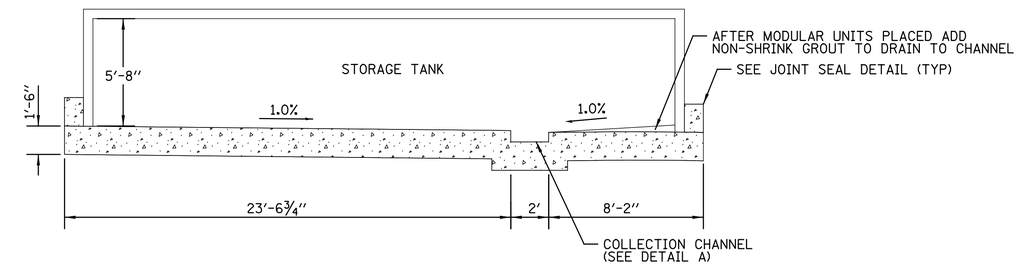

SECTION B-B

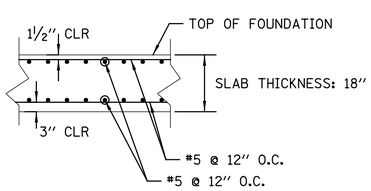

DETAIL B

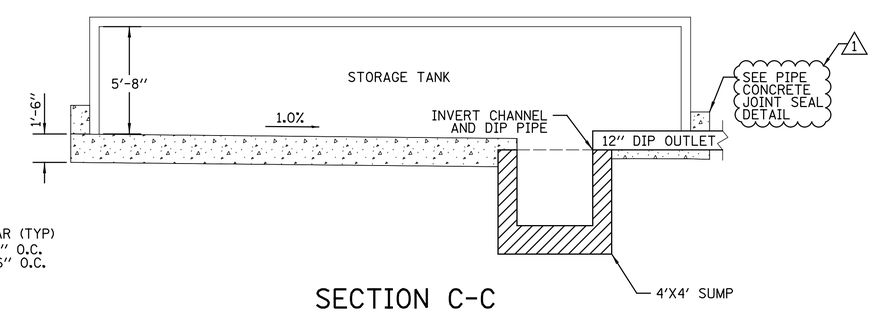

SECTION C-C

SEE PLAN AND PROFILE OF EACH TANK FOR INVERTS

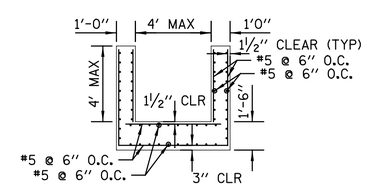

SUMP-PIT DETAIL

NOTES:

1. CONCRETE STRENGTH @ 28 DAYS, 5%-8% ENTRAINED AIR, 4" MAX. SLUMP.
2. NET ALLOWABLE SOIL PRESSURE GREATER THAN OR EQUAL TO 3000 PSF. SOIL CONDITIONS TO BE REVIEWED AND APPROVED BY THE COMMISSIONER.
3. 4"+/- GRANULAR PAD SHALL BE PROVIDED FOR LEVEL WORKING SURFACE.
4. REBAR: ASTM A-706, GRADE 60, EPOXY BAR.
6. DIMENSION OF FOUNDATION MUST HAVE 1'-0" OVERHANG BEYOND EXTERNAL FACE OF UNITS TO PROVIDE PERIMETER SEAL.
7. ALL DIMENSIONS OF PAD AND MODULAR STORAGE UNITS TO BE REVIEWED AND APPROVED BY THE COMMISSIONER.

PERCENT COMPLETE	DATE
30	5/27/15
60	7/28/15
75	9/1/15
90	9/1/16
100	8/1/17
⚠ ADDENDUM NO. 1	12/5/17

CITY OF CHICAGO
DEPARTMENT OF WATER MANAGEMENT
BUREAU OF ENGINEERING SERVICES

CONCRETE PAD DETAILS FOR STORAGE STRUCTURES

DRAWN:
DESIGNED:
CHECKED:
REVIEWED:

PN 7012

X:\0100s\0146.19\Eng_Docs\Roadway\CDWM7012-SHT-TankDetail01.dgn
12/5/2017

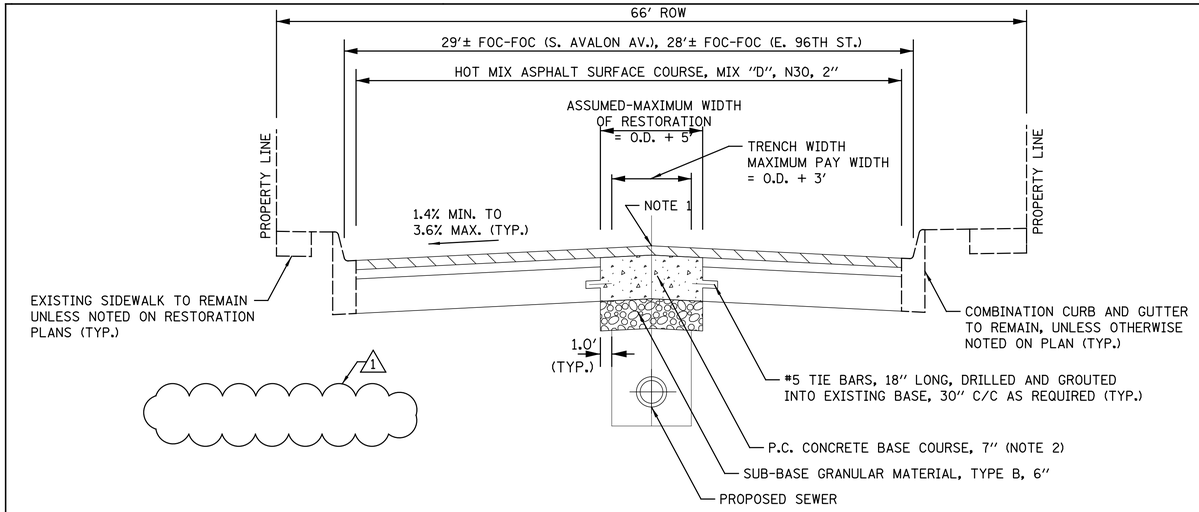

PROPOSED PARTIAL PAVEMENT RESTORATION CROSS SECTION

N.T.S.

S. AVALON AV. FROM S. 97TH ST. TO E. 96TH ST.
E. 96TH ST. FROM S. AVALON AV. TO S. WOODLAWN AV.

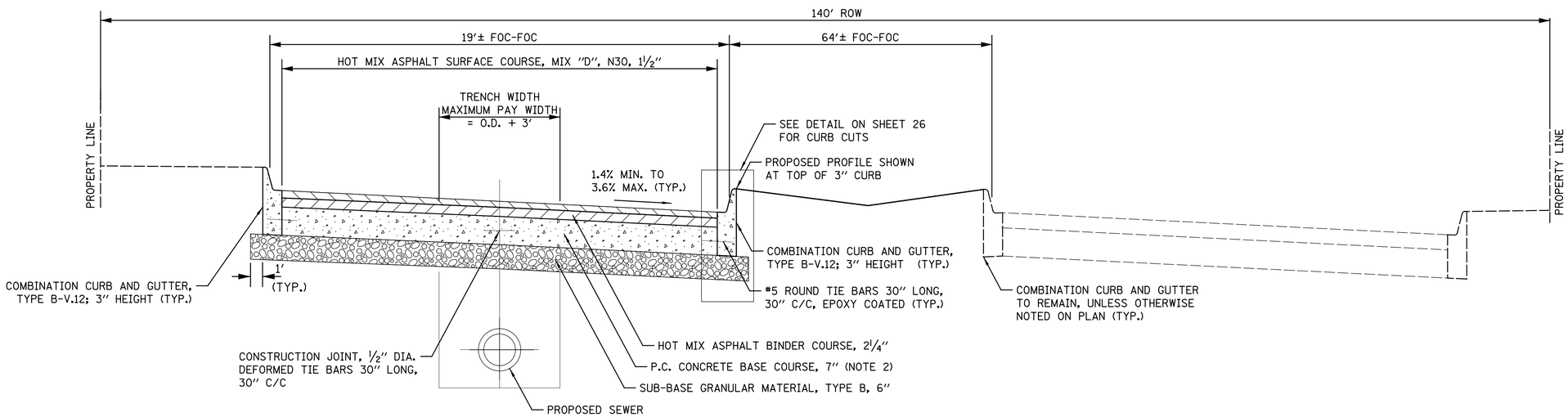

PROPOSED FULL PAVEMENT RESTORATION CROSS SECTION

N.T.S.

E. 97TH ST. EASTBOUND LANE FROM S. AVALON AV. TO S. WOODLAWN AV.
E. 97TH ST. EASTBOUND LANE FROM S. WOODLAWN AV. TO S. UNIVERSITY AV.
E. 97TH ST. EASTBOUND LANE FROM S. UNIVERSITY AV. TO S. GREENWOOD AV.
E. 97TH ST. EASTBOUND LANE FROM S. GREENWOOD AV. TO S. DOBSON AV.
E. 97TH ST. EASTBOUND LANE FROM S. DOBSON AV. TO S. ELLIS AV.

CROSS SECTION NOTES:
1. ADJUST ROADWAY CENTERLINE ELEVATION TO ACHIEVE COMPLIANT CROSS SLOPES

2. USE P.C. CONCRETE BASE COURSE, 7" MIN. FOR RESIDENTIAL STREETS, AND 9" MIN. FOR ARTERIAL STREETS.

PERCENT COMPLETE	DATE
30	5/27/15
60	7/28/15
75	9/1/15
90	9/1/16
100	8/1/17
1 ADDENDUM NO. 1	12/5/17

CITY OF CHICAGO
DEPARTMENT OF WATER MANAGEMENT
BUREAU OF ENGINEERING SERVICES

TYPICAL SECTIONS

DRAWN: ALG
DESIGNED: ALG
CHECKED: WLS
REVIEWED: WLS

PN 7012

Y:\chicago\10100S\0146.19\Eng_Docs\Roadway\CDWM7012-SHT-TYP01.dgn
12/5/2017

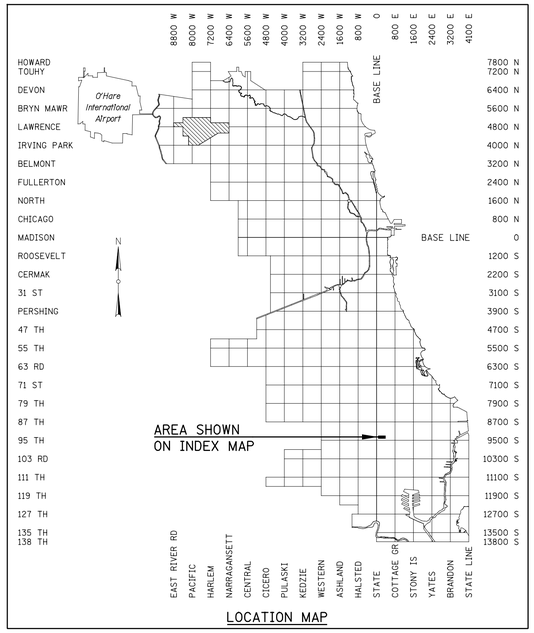

LOCATION MAP

PROJECT LOCATION

N.T.S.

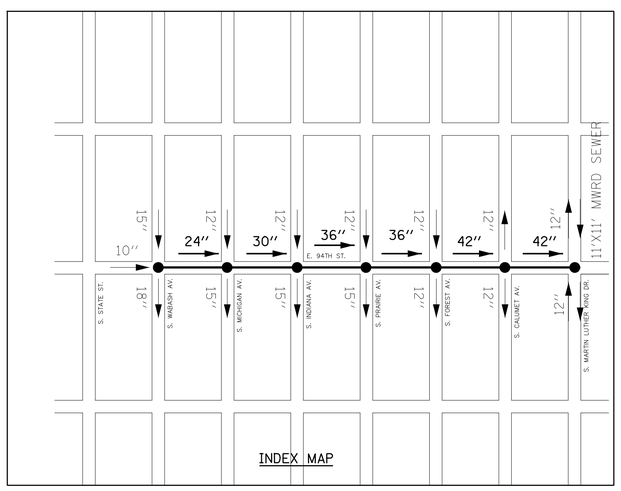

INDEX MAP

LEGEND

TO BE BUILT UNDER THIS CONTRACT

PRINCIPAL EXISTING CITY SEWER

MAIN LINE LENGTH = 2233 L.F.

AUXILLARY LENGTH = 140 L.F.

TOTAL LENGTH = 2373 L.F.

STANDARD SYMBOLS

EX	PR	
		SEWER MANHOLE (TYPE A)
		SEWER MANHOLE (TYPE B)
		SEWER MANHOLE (TYPE B) MODIFIED
		SEWER MANHOLE (TYPE B) REVERSED
		SEWER MANHOLE (TYPE C-SINGLE DROP)
		SEWER MANHOLE (TYPE C-DOUBLE DROP)
		SEWER MANHOLE TUMBLING BASIN
XX-Y		MANHOLE XX- (CO=CONCRETE, LI=LINED, BR=BRICK), Y-(F= FILL)
XX-Y		CATCH BASIN XX- (CO=CONCRETE, LI=LINED, BR=BRICK), Y-(F= FILL)
		STRUCTURE REMOVAL
		INLET
GB		GUTTER BOX
		D.C. - DRAIN CONNECTION-WATER MAIN QUALITY PIPE
		D.C. - DRAIN CONNECTION-PR CB
		D.C. - DRAIN CONNECTION-EX CB
		DIRECTION OF FLOW
		SUMMIT
12.5		ORDINANCE GRADE
		SIGN
		BUSH
XX''		TREE
12''		EVERGREEN TREE
		FIRE HYDRANT
		CITY LIGHT POLE
		TRAFFIC SIGNAL ON CITY LIGHT POLE
		UTILITY POLE
		TRAFFIC SIGNAL
		CONTROLLER BOX
		UTILITY VAULT
		SOIL BORING

STANDARD SYMBOLS

EX	PR	
		PARKING METER
		"L" COLUMN
		MAIL BOX
	+	CUT CROSS IN CONCRETE
		DRY WEATHER WATER SURFACE
		PAY & DISPLAY PARKING METER BOX
		WATER MAIN CUT & CAP (BY OTHERS)
		WATER METER
W	W	WATER VAULT
		WATER SERVICE VALVE
		WATER BUFFALO BOX
G		GAS BUFFALO BOX
		GAS METER
		ELEC. METER
G		GAS SERVICE VALVE
E		CITY ELEC MH
CE		COMED MH
G		GAS MH
T		TELECOM MH
T		TELECOM VAULT
E		CITY ELEC. VAULT
CE		COMED VAULT
G		GAS VAULT
		ADA DETECTABLE TILE
		THRUST BLOCK
		WATER MAIN SUPPORT TYPE I, A or B, (BY OTHERS)
		WATER MAIN SUPPORT, TYPE II, (BY OTHERS)
		WATER MAIN SUPPORT, TYPE III, (BY OTHERS)

STANDARD LINE TYPES

10" SEWER	ABANDONED SEWER
12" G 12"	EXISTING GAS
16" W 16"	EXISTING WATER
A A A	EXISTING AERIAL
L L L	EXISTING BURIED CABLE
CTV CTV CTV	EXISTING CABLE TV
E E E	EXISTING CITY ELECTRIC
ComEd ComEd	EXISTING COMED
FO FO FO	EXISTING FIBER OPTICS
F&P F&P F&P	EXISTING FIRE AND POLICE
O O	EXISTING OIL
T T T	EXISTING TELEPHONE
	EXISTING SEWER
	PROPOSED SEWER
	EXISTING BUILDING LINE
X X X X X X X	FENCE
	BURIED RAILROAD TRACKS
	EXISTING ROW LINE
54+00	BASE LINE

SPECIAL NOTES - FOR CONTRACTORS

1. THE CONTRACTOR SHALL MAINTAIN ACCESS TO PRIVATE PROPERTIES DURING THE CONSTRUCTION OR REMOVAL OPERATIONS. BUSINESS PROPERTY OWNERS SHALL BE NOTIFIED 72 HOURS IN ADVANCE OF CONSTRUCTION OPERATIONS WHICH MAY AFFECT THEIR DAILY SCHEDULES. THE CONTRACTOR SHALL COORDINATE WORK THROUGH THE RESIDENT ENGINEER TO AVOID ANY UNDUE INCONVENIENCE TO LOCAL BUSINESSES.

2. THE CONTRACTOR MUST INSTALL FLOW RESTRICTORS IN ALL EXISTING/PROPOSED CATCH BASINS WITHIN THE PROJECT LIMITS (AREA OF PAVEMENT RESURFACING) IN ACCORDANCE WITH DWM STANDARDS.

3. THE CONTRACTOR IS RESPONSIBLE FOR THE COST OF REPLACEMENT OF ANY BENCH MONUMENT DAMAGED OR DESTROYED DURING CONSTRUCTION. WHERE SECTION OR SUBSECTION MONUMENTS ARE ENCOUNTERED, THE COMMISSIONER SHALL BE NOTIFIED BEFORE SUCH MONUMENTS ARE REMOVED. THE CONTRACTOR SHALL PROTECT AND CAREFULLY PRESERVE ALL PROPERTY MARKERS AND MONUMENTS UNTIL THE ENGINEER, AN AUTHORIZED SURVEYOR, OR AGENT HAS WITNESSED OR OTHERWISE REFERENCED THEIR LOCATION.

4. THE CONTRACTOR SHALL VERIFY THE EXACT LOCATION OF ALL UTILITIES THAT MAY INTERFERE WITH CONSTRUCTION OPERATIONS, AND SHALL REPORT TO THE COMMISSIONER ANY OMISSIONS AND DIFFERENCES FROM THE LOCATIONS SHOWN ON THE PLANS. THE COST OF THIS WORK WILL BE CONSIDERED INCIDENTAL TO THE CONTRACT.

5. PROPOSED TRENCH WIDTHS SHOWN ON THE PLAN AND PROFILE SHEETS ARE FOR OUC REVIEW PURPOSES ONLY. TRENCH WIDTHS FOR FINAL PAYMENT ARE INDICATED ON THE TYPICAL CROSS SECTION DETAILS.

GENERAL NOTES

1. UNLESS OTHERWISE SHOWN ON THE PLANS, OR ORDERED BY THE COMMISSIONER, SOLID LIDS MUST BE PLACED ON ALL SEWER MANHOLES, EXCEPT AT STREET INTERSECTIONS.

2. RECONNECT ALL LIVE DRAINS TO NEW SEWER.

3. THE CONTRACTOR IS RESPONSIBLE FOR LOCATING ALL EXISTING PRIVATE DRAINS.

4. SEE OUC SUBMITTAL FOR GEOTECHNICAL INFORMATION AND TRENCHING EXCAVATION EXCEEDING 12 FEET DEEP.

5. A PERMIT MUST BE OBTAINED FROM THE CITY OF CHICAGO, DEPARTMENT OF WATER MANAGEMENT FOR ANY UNDERGROUND SEWER WORK INCLUDING ADJUSTMENT OF SEWER STRUCTURES AND REMOVAL/REPLACEMENT OF FRAMES AND LIDS. THE PERMIT MUST BE OBTAINED BY AND THE WORK MUST BE PERFORMED BY A LICENSED DRAIN LAYER UNDER PERMITS AND INSPECTION OF THE CITY OF CHICAGO, DEPARTMENT OF WATER MANAGEMENT.

6. THE LOCATION AND ELEVATIONS OF EXISTING UTILITIES, WATER PIPES, SEWER, CONDUITS, LINES AND OTHER UNDERGROUND STRUCTURES SHOWN ON THE PLANS AND PROFILES HAVE BEEN OBTAINED FROM DRAWINGS AND DATA RECEIVED FROM VARIOUS SOURCES AND THE INFORMATION IS BELIEVED TO BE CORRECT BUT IS NOT GUARANTEED TO BE CORRECT. HORIZONTAL AND VERTICAL LOCATION OF ALL EXISTING UTILITIES SHALL BE FIELD VERIFIED.

7. ANY OVERHEAD 911 OR COMED FACILITIES WHICH CROSS THE SEWER TRENCH OR ARE WITHIN 20 FEET OF THE CENTERLINE OF THE SEWER ARE SHOWN ON THE PLAN AND PROFILE SHEETS.

8. ALL KNOWN WATER PIPE SERVICES OVER 2" ARE SHOWN BUT THOSE 2" AND UNDER ARE NOT SHOWN OR NOTED. THE INTERRUPTION OF WATER SERVICE LINES SHALL NOT BE ALLOWED WITHOUT PRIOR APPROVAL OF THE COMMISSIONER.

9. 48 HOURS BEFORE STARTING EXCAVATION, THE CONTRACTOR SHALL CALL DIGGER (CHICAGO UTILITY ALERT NETWORK) AT 312-744-7000 TO HAVE THE LOCATION OF EXISTING UNDERGROUND UTILITIES STAKED.

10. SEVEN (7) DAYS NOTICE MUST BE GIVEN TO THE OEMC TRAFFIC MANAGEMENT TASK FORCE PRIOR TO STARTING ANY WORK OR MAKING ANY CHANGES TO EXISTING TRAFFIC PATTERNS. DETAILS OF ANY LANE OR ROADWAY CLOSURE INCLUDING DETOUR PLANS MUST BE REVIEWED AND APPROVED BY THE OEMC TRAFFIC MANAGEMENT TASK FORCE. CONTACT 312-743-7394.

11. SEVEN (7) DAYS NOTICE MUST BE GIVEN TO CDOT PRIOR TO STARTING ANY WORK OR MAKING ANY CHANGES IN THE TRAFFIC PATTERN & DETAILS OF ANY LANE OR ROADWAY CLOSURE INCLUDING DETOUR PLANS MUST BE REVIEWED AND APPROVED BY CDOT AT 312-744-4652.

12. ALL WORK IN THE PUBLIC WAY REQUIRES A PERMIT FROM THE DEPARTMENT OF TRANSPORTATION, PERMIT DIVISION AT 312-744-4652.

13. ALL SEWER INSTALLATIONS MUST MEET IEPA SEPARATION REQUIREMENTS FOR WATER AND SEWER PIPES. ALL PROPOSED/REPLACED SEWER LATERALS FROM CATCH BASINS/INLETS, SEWER MAINS, AND PRIVATE DRAINS (COLLECTIVELY KNOWN AS "SEWER FACILITIES") THAT ARE PARALLEL TO WATER MAINS, SERVICES OR FIRE HYDRANT LEADS (COLLECTIVELY KNOWN AS "WATER FACILITIES") THAT ARE LESS THAN 18 INCHES BELOW THE WATER FACILITY AND HAVE LESS THAN 10 FEET OF HORIZONTAL SEPARATION FROM THE OUTSIDE EDGE OF THE WATER FACILITY MUST BE MADE OUT OF DUCTILE IRON/WATER MAIN QUALITY PIPE FOR 10 FEET ON EITHER SIDE OF THE OUTSIDE EDGE OF THE WATER FACILITY. ADDITIONALLY, ALL SEWER FACILITIES THAT CROSS PERPENDICULARLY BELOW WATER FACILITIES WITH LESS THAN 18 INCHES VERTICAL SEPARATION MUST BE MADE OUT OF DUCTILE IRON/WATER MAIN QUALITY PIPE FOR 10 FEET ON EITHER SIDE OF THE OUTSIDE EDGE OF THE WATER FACILITY. IF ANY SEWER FACILITY CROSSES PERPENDICULARLY ABOVE A WATER FACILITY, THEN THE SEWER FACILITY SHALL BE AT LEAST 18 INCHES ABOVE THE WATER FACILITY AND THE SEWER FACILITY MUST MADE OUT OF DUCTILE IRON/WATER MAIN QUALITY PIPE FOR 10 FEET ON EITHER SIDE OF THE OUTSIDE EDGE OF THE WATER FACILITY. SEWER LATERALS THAT REQUIRE DUCTILE IRON/WATER MAIN QUALITY PIPE SHALL BE DUCTILE IRON/WATER MAIN QUALITY PIPE FROM THE CATCH BASIN TO A POINT 10 FEET BEYOND THE EDGE OF THE WATER FACILITY.

PERCENT COMPLETE	DATE
30	09-06-16
60	10-21-16
75	11-22-16
90	11-28-16
100	12-01-16
ADDENDUM NO. 1	12-05-17

CITY OF CHICAGO
DEPARTMENT OF WATER MANAGEMENT
BUREAU OF ENGINEERING SERVICES

LOCATION/INDEX MAP - GENERAL/SPECIAL NOTES, LEGEND

DRAWN: LE
DESIGNED: HFF
CHECKED: PMS
REVIEWED: EPC

OUC #2016-73622

1 OF 31

PN 7174

$FILEL$
$DATE$

CDWM7174_01.dgn 12/01/17 9:19:36 AM

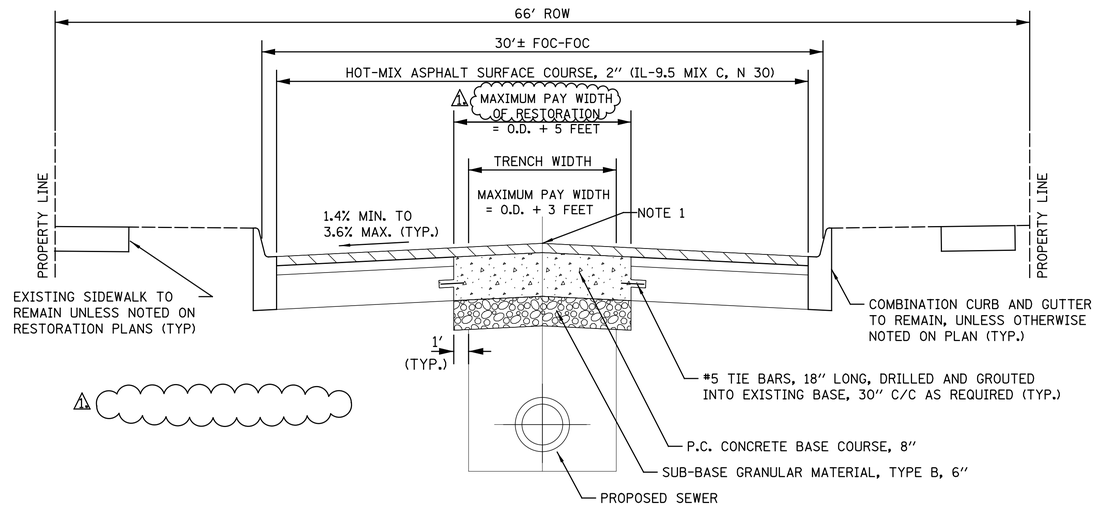

PROPOSED PARTIAL PAVEMENT RESTORATION CROSS SECTION

N.T.S.

E 94TH ST FROM S MARTIN LUTHER KING DR TO S WABASH AV

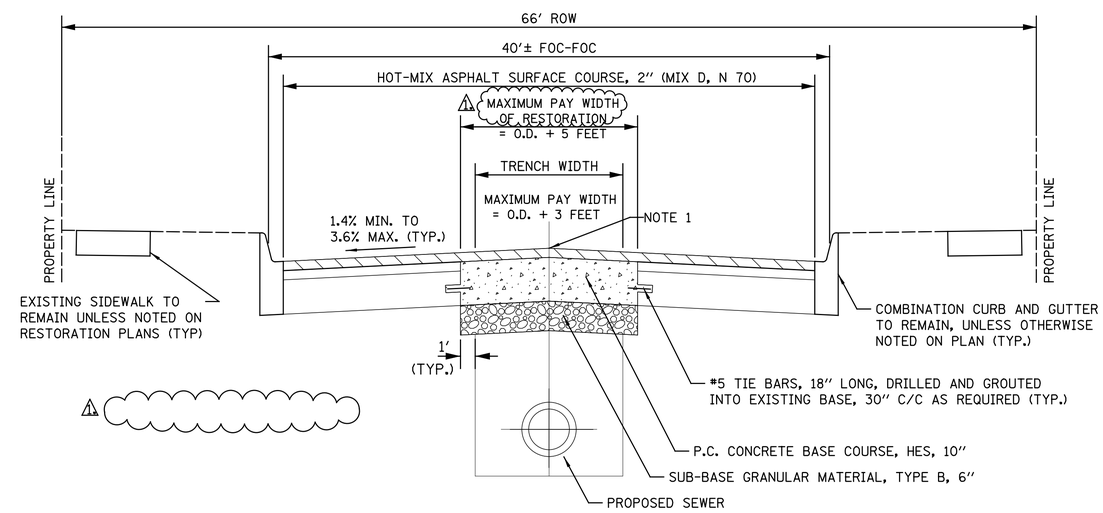

PROPOSED PARTIAL PAVEMENT RESTORATION CROSS SECTION

N.T.S.

S MARTIN LUTHER KING DR AT E 94TH ST

CROSS SECTION NOTES:
1. ADJUST ROADWAY CENTERLINE ELEVATION TO ACHIEVE COMPLIANT CROSS SLOPES

PERCENT COMPLETE	DATE
30	09-06-16
60	10-21-16
75	11-22-16
90	11-28-16
100	12-01-16
1 ADDENDUM NO. 1	12-05-17

CITY OF CHICAGO
DEPARTMENT OF WATER MANAGEMENT
BUREAU OF ENGINEERING SERVICES

TYPICAL SECTION

DRAWN: LE
DESIGNED: HFF
CHECKED: PMS
REVIEWED: EPC

OUC #2016-73622

10 OF 31

PN 7174

FILE NAME $FILE$
PLOT DATE: $DATE$
USER NAME = $USER$

CDWM7174_10.dgn 12/01/17 9:14:37 AM

SCHEDULE OF PRICES

SCHEDULE OF PRICES
DWM PROJECT NUMBERS 6498A, 6902, 7012 and 7174
P-2017-05

ITEM NO.	DESCRIPTION	UNIT	APPROX. QUANT.	UNIT PRICE	TOTAL PRICE (APPROX. QTY. x UNIT PRICE)
1	TREE REMOVAL (6 TO 15 UNITS DIAMETER)	UNIT	127		
2	EARTH EXCAVATION	CU YD	2338		
3	SPECIAL SOIL WASTE REMOVAL AND DISPOSAL	CU YD	12561		
4	WASTE CHARACTERIZATION ANALYSIS	EACH	21		
5	SOIL BORING	EACH	5		
6	TRENCH BACKFILL	CU YD	22712		
7	TOPSOIL FURNISH AND PLACE, 3"	SQ YD	10020		
8	SEEDING, CLASS 2A	ACRE	2		
9	NITROGEN FERTILIZER NUTRIENT	POUND	172		
10	PHOSPHOROUS FERTILIZER NUTRIENT	POUND	172		
11	POTASSIUM FERTILIZER NUTRIENT	POUND	172		
12	EROSION CONTROL BLANKET	SQ YD	9270		
13	SODDING, SALT TOLERANT	SQ YD	3015		
14	SUBBASE GRANULAR MATERIAL, TYPE B 4"	SQ YD	560		
15	SUBBASE GRANULAR MATERIAL, TYPE B 6"	SQ YD	24006		
16	SUBBASE GRANULAR MATERIAL, TYPE B 8"	SQ YD	187		
17	PORTLAND CEMENT CONCRETE BASE COURSE, VARIABLE DEPTH	CU YD	10752		
18	PORTLAND CEMENT CONCRETE BASE COURSE, HES, VARIABLE DEPTH	CU YD	93		
19	TEMPORARY COLD PATCH	TON	400		
20	TEMPORARY STONE	TON	400		
21	STABILIZATION STONE	TON	200		
22	BITUMINOUS MATERIALS (TACK COAT)	POUND	7637		

SCHEDULE OF PRICES
DWM PROJECT NUMBERS 6498A, 6902, 7012 and 7174
P-2017-05

ITEM NO.	DESCRIPTION	UNIT	APPROX. QUANT.	UNIT PRICE	TOTAL PRICE (APPROX. QTY. x UNIT PRICE)
23	LEVELING BINDER (MACHINE METHOD), N30	TON	345		
24	LEVELING BINDER (MACHINE METHOD), N70	TON	77		
25	HOT-MIX ASPHALT BINDER COURSE, IL-19.0L, N30	TON	422		
26	HOT-MIX ASPHALT SURFACE COURSE, IL-9.5L, MIX "C", N30	TON	4306		
27	HOT-MIX ASPHALT SURFACE COURSE, MIX "D", N50	TON	125		
28	HOT-MIX ASPHALT BINDER COURSE, MIX "D", N50	TON	125		
29	HOT-MIX ASPHALT SURFACE COURSE, MIX "D", N70	TON	764		
30	POLYMERIZED HOT-MIX ASPHALT SURFACE COURSE, MIX "E", N70	TON	36		
31	HMA SPEED HUMPS	SQ YD	80		
32	PORTLAND CEMENT CONCRETE PAVEMENT 10"	SQ YD	2466		
33	PORTLAND CEMENT CONCRETE ALLEY/DRIVEWAY PAVEMENT, 8 INCH	SQ YD	200		
34	BUS PAD, 10"	SQ YD	187		
35	PROTECTIVE CONCRETE COAT	SQ YD	5076		
36	SIDEWALK/DRIVEWAY, SPECIAL	SQ FT	47		
37	PORTLAND CEMENT CONCRETE SIDEWALK, 5 INCH	SQ FT	6360		
38	PORTLAND CEMENT CONCRETE SIDEWALK, 8 INCH	SQ FT	1910		
39	PORTLAND CEMENT CONCRETE ADA RAMP, 5 INCH	SQ FT	6987		
40	PORTLAND CEMENT CONCRETE ADA RAMP, 8 INCH	SQ FT	641		
41	DETECTABLE WARNING TILES, LINEAR (CAST IRON)	SQ FT	1210		
42	PAVEMENT SURFACE REMOVAL, 2" AND LESS	SQ YD	25898		
43	PAVEMENT REMOVAL	SQ YD	5521		
44	DRIVEWAY/ALLEY PAVEMENT REMOVAL	SQ YD	204		
45	CURB REMOVAL	FOOT	148		

SCHEDULE OF PRICES
DWM PROJECT NUMBERS 6498A, 6902, 7012 and 7174
P-2017-05

ITEM NO.	DESCRIPTION	UNIT	APPROX. QUANT.	UNIT PRICE	TOTAL PRICE (APPROX. QTY. x UNIT PRICE)
46	COMBINATION CURB AND GUTTER REMOVAL	FOOT	6268		
47	SIDEWALK REMOVAL	SQ FT	13515		
48	CONCRETE STRUCTURES	CU YD	15		
49	REINFORCEMENT BARS, EPOXY COATED	POUND	13561		
50	CONCRETE COLLAR	CU YD	200		
51	SEWER, 48", CLASS III, REINFORCED CONCRETE PIPE, IN OPEN CUT	FOOT	623		
52	SEWER, 42", CLASS III, REINFORCED CONCRETE PIPE, IN OPEN CUT	FOOT	665		
53	SEWER, 36", CLASS IV, REINFORCED CONCRETE PIPE, IN OPEN CUT	FOOT	5		
54	SEWER, 36", CLASS III, REINFORCED CONCRETE PIPE, IN OPEN CUT	FOOT	1623		
55	SEWER, 30", CLASS III, REINFORCED CONCRETE PIPE, IN OPEN CUT	FOOT	1677		
56	SEWER, 30", CLASS III, REINFORCED CONCRETE ARCH PIPE, IN OPEN CUT	FOOT	7		
57	SEWER, 24", CLASS III, REINFORCED CONCRETE PIPE, IN OPEN CUT	FOOT	3671		
58	SEWER, 18", VITRIFIED CLAY PIPE, IN OPEN CUT	FOOT	48		
59	SEWER, 12", VITRIFIED CLAY PIPE, IN OPEN CUT	FOOT	114		
60	SEWER, 36", DUCTILE IRON PIPE, IN OPEN CUT	FOOT	21		
61	SEWER, 24", DUCTILE IRON PIPE, IN OPEN CUT	FOOT	41		
62	SEWER, 18", DUCTILE IRON PIPE, IN OPEN CUT	FOOT	70		
63	SEWER, 10", DUCTILE IRON PIPE, IN OPEN CUT	FOOT	40		
64	TUMBLING BASIN, 60-INCH DIAMETER BETWEEN S AVALON AV AND S WOODLAWN AV, PRECAST CONCRETE	LSUM	1		
65	TUMBLING BASIN, 60-INCH DIAMETER BETWEEN S WOODLAWN AV AND S UNIVERSITY AV, PRECAST CONCRETE	LSUM	1		

SCHEDULE OF PRICES
DWM PROJECT NUMBERS 6498A, 6902, 7012 and 7174
P-2017-05

ITEM NO.	DESCRIPTION	UNIT	APPROX. QUANT.	UNIT PRICE	TOTAL PRICE (APPROX. QTY. x UNIT PRICE)
66	TUMBLING BASIN, 60-INCH DIAMETER BETWEEN S UNIVERSITY AV AND S GREENWOOD AV, PRECAST CONCRETE	LSUM	1		
67	TUMBLING BASIN, 60-INCH DIAMETER BETWEEN S GREENWOOD AV AND S DOBSON AV, PRECAST CONCRETE	LSUM	1		
68	TUMBLING BASIN, 60-INCH DIAMETER BETWEEN S DOBSON AV AND S ELLIS AV, PRECAST CONCRETE	LSUM	1		
69	TUMBLING BASIN, 60-INCH DIAMETER BETWEEN S AVALON AV AND S WOODLAWN AV IN MEDIAN, PRECAST CONCRETE	LSUM	1		
70	TUMBLING BASIN, 60-INCH DIAMETER BETWEEN S WOODLAWN AV AND S UNIVERSITY AV IN MEDIAN, PRECAST CONCRETE	LSUM	1		
71	TUMBLING BASIN, 60-INCH DIAMETER BETWEEN S UNIVERSITY AV AND S GREENWOOD AV IN MEDIAN, PRECAST CONCRETE	LSUM	1		
72	TUMBLING BASIN, 60-INCH DIAMETER BETWEEN S GREENWOOD AV AND S DOBSON AV IN MEDIAN, PRECAST CONCRETE	LSUM	1		
73	TUMBLING BASIN, 60-INCH DIAMETER BETWEEN S DOBSON AV AND S ELLIS AV IN MEDIAN, PRECAST CONCRETE	LSUM	1		
74	CONNECTION STRUCTURE AT E 92ND PL AND S COTTAGE GROVE AV, CAST-IN-PLACE CONCRETE	LSUM	1		
75	JUNCTION STRUCTURE ON E 95TH ST	LSUM	1		
76	UNDERGROUND STORAGE STRUCTURE ON E 95TH ST	FOOT	582		
77	UNDERGROUND STORAGE STRUCTURE NO. 1 BETWEEN S AVALON AV AND S WOODLAWN AV	LSUM	1		
78	UNDERGROUND STORAGE STRUCTURE NO. 2 BETWEEN S WOODLAWN AV AND S UNIVERSITY AV	LSUM	1		
79	UNDERGROUND STORAGE STRUCTURE NO. 3 BETWEEN S UNIVERSITY AV AND S GREENWOOD AV	LSUM	1		

SCHEDULE OF PRICES
DWM PROJECT NUMBERS 6498A, 6902, 7012 and 7174
P-2017-05

ITEM NO.	DESCRIPTION	UNIT	APPROX. QUANT.	UNIT PRICE	TOTAL PRICE (APPROX. QTY. x UNIT PRICE)
80	UNDERGROUND STORAGE STRUCTURE NO. 4 BETWEEN S GREENWOOD AV AND S DOBSON AV	LSUM	1		
81	UNDERGROUND STORAGE STRUCTURE NO. 5 BETWEEN S DOBSON AV AND S ELLIS AV	LSUM	1		
82	DRAIN CONNECTION, 72", REINFORCED CONCRETE PIPE	FOOT	8		
83	DRAIN CONNECTION, 30", REINFORCED CONCRETE PIPE	FOOT	91		
84	DRAIN CONNECTION, 21", VITRIFIED CLAY PIPE	FOOT	7		
85	DRAIN CONNECTION, 18", VITRIFIED CLAY PIPE	FOOT	8		
86	DRAIN CONNECTION, 15", VITRIFIED CLAY PIPE	FOOT	103		
87	DRAIN CONNECTION, 12", VITRIFIED CLAY PIPE	FOOT	194		
88	DRAIN CONNECTION, 10", VITRIFIED CLAY PIPE	FOOT	65		
89	DRAIN CONNECTION, 8", VITRIFIED CLAY PIPE	FOOT	793		
90	DRAIN CONNECTION, 6", VITRIFIED CLAY PIPE	FOOT	775		
91	DRAIN CONNECTION, 12", DUCTILE IRON PIPE	FOOT	20		
92	DRAIN CONNECTION, 10", DUCTILE IRON PIPE	FOOT	45		
93	DRAIN CONNECTION, 8", DUCTILE IRON PIPE	FOOT	1240		
94	DRAIN CONNECTION, 6", DUCTILE IRON PIPE	FOOT	105		
95	CATCH BASINS, 4'-DIAMETER	EACH	98		
96	MANHOLES, TYPE A, 3'-DIAMETER	EACH	7		
97	MANHOLES, TYPE A, 4'-DIAMETER	EACH	1		
98	MANHOLES, TYPE B, 3'-DIAMETER	EACH	23		
99	MANHOLES, TYPE B, 4'-DIAMETER	EACH	1		
100	MANHOLES, TYPE B MODIFIED, 3'-DIAMETER	EACH	1		

SCHEDULE OF PRICES
DWM PROJECT NUMBERS 6498A, 6902, 7012 and 7174
P-2017-05

ITEM NO.	DESCRIPTION	UNIT	APPROX. QUANT.	UNIT PRICE	TOTAL PRICE (APPROX. QTY. x UNIT PRICE)
101	MANHOLES, TYPE B MODIFIED, 4'-DIAMETER	EACH	2		
102	MANHOLES, TYPE C DOUBLE-DROP, 3'-DIAMETER	EACH	1		
103	PRECAST MANHOLE RISER	VERT FT	84		
104	PRECAST CONCRETE FLAT SLAB TOP	EACH	2		
105	INLETS	EACH	30		
106	CHICAGO STANDARD FRAMES	EACH	192		
107	CHICAGO STANDARD LIDS	EACH	192		
108	GRATES, TYPE 8	EACH	20		
109	CATCH BASINS TO BE CLEANED	EACH	33		
110	MANHOLES TO BE CLEANED	EACH	2		
111	VALVE VAULTS TO BE CLEANED	EACH	1		
112	CATCH BASINS TO BE ADJUSTED	EACH	14		
113	MANHOLES TO BE ADJUSTED	EACH	13		
114	INLETS TO BE ADJUSTED	EACH	1		
115	VALVE VAULTS TO BE ADJUSTED	EACH	22		
116	VALVE BOXES TO BE ADJUSTED	EACH	2		
117	FILLING MANHOLES	EACH	3		
118	FILLING CATCH BASINS	EACH	69		
119	REMOVING INLETS	EACH	21		
120	CONTROLLED LOW-STRENGTH MATERIAL (CLSM)	CU YD	34		
121	COMBINATION CONCRETE CURB AND GUTTER, TYPE B-V.12	FOOT	6598		
122	CONCRETE CURB, TYPE B	EACH	1036		
123	FLAP GATE 12"	EACH	5		

SCHEDULE OF PRICES
DWM PROJECT NUMBERS 6498A, 6902, 7012 and 7174
P-2017-05

ITEM NO.	DESCRIPTION	UNIT	APPROX. QUANT.	UNIT PRICE	TOTAL PRICE (APPROX. QTY. x UNIT PRICE)
124	ENGINEER'S FIELD OFFICE	CAL MO	17		
125	MOBILIZATION	LSUM	1		
126	TRAFFIC CONTROL AND PROTECTION	CAL DAY	505		
127	PROJECT SIGNS	EACH	5		
128	CHANGEABLE MESSAGE SIGN	CAL DAY	126		
129	DRILL AND GROUT DOWEL/TIE BARS	EACH	7521		
130	TEMPORARY PAVEMENT MARKING - LINE 4"	FOOT	4375		
131	TEMPORARY CONCRETE BARRIER	FOOT	1287		
132	RELOCATE TEMPORARY CONCRETE BARRIER	FOOT	5593		
133	IMPACT ATTENUATORS, TEMPORARY (NON-REDIRECTIVE), TEST LEVEL 2	EACH	1		
134	IMPACT ATTENUATORS, TEMPORARY (FULLY REDIRECTIVE, NARROW), TEST LEVEL 3	EACH	2		
135	IMPACT ATTENUATORS, RELOCATE (FULLY REDIRECTIVE, NARROW), TEST LEVEL 3	EACH	6		
136	THERMOPLASTIC PAVEMENT MARKING - LETTERS AND SYMBOLS	SQ FT	77		
137	THERMOPLASTIC PAVEMENT MARKING - LINE 4"	FOOT	6296		
138	THERMOPLASTIC PAVEMENT MARKING - LINE 6"	FOOT	1032		
139	THERMOPLASTIC PAVEMENT MARKING - LINE 12"	FOOT	842		
140	THERMOPLASTIC PAVEMENT MARKING - LINE 24"	FOOT	1978		
141	PAVEMENT MARKING REMOVAL	SQ FT	1956		
142	TRENCH AND BACKFILL FOR 2-4 DUCTS	FOOT	570		
143	ELECTRICAL MANHOLE 3'X4'X4' WITH 30" FRAME AND LID	EACH	2		
144	DRILL EXISTING MANHOLE OR HANDHOLE	EACH	1		
145	CLEAN EXISTING ELECTRICAL MANHOLE OR HANDHOLE	EACH	2		

SCHEDULE OF PRICES
DWM PROJECT NUMBERS 6498A, 6902, 7012 and 7174
P-2017-05

ITEM NO.	DESCRIPTION	UNIT	APPROX. QUANT.	UNIT PRICE	TOTAL PRICE (APPROX. QTY. x UNIT PRICE)
146	PVC CONDUIT IN DUCT, CONCRETE ENCASED, 4-3"	FOOT	570		
147	ROD AND CLEAN DUCT IN EXISTING CONDUIT SYSTEM	FOOT	1380		
148	INTERCEPT EXISTING CONDUIT	EACH	4		
149	PULL AND REINSTALL ELECTRIC CABLE FROM CONDUIT	FOOT	3839		
150	BREAKDOWN MANHOLE IN PAVEMENT	EACH	1		
151	TREE INSTALLATION	EACH	51		
152	MAINTAIN EXISTING LIGHTING SYSTEM	LSUM	1		
153	MAINTAIN EXISTING TRAFFIC SIGNAL, INTERSECTION OF E 95TH ST AND S COTTAGE GROVE AVE (NORTH LEG)	EACH	1		
154	MAINTAIN EXISTING TRAFFIC SIGNAL, INTERSECTION OF E 95TH ST AND S COTTAGE GROVE AVE (SOUTH LEG)	EACH	1		
155	TEMPORARY WATER MAIN SUPPORT STRUCTURE - TYPE III	EACH	15		
156	TEMPORARY WATER MAIN SUPPORT STRUCTURE - TYPE II, 16"	EACH	1		
157	CUT, CAP, AND REPLACE EXISTING WATER MAIN FOR UTILITY INSTALLATION, 6-INCH	EACH	1		
158	CUT, CAP, AND REPLACE EXISTING WATER MAIN FOR UTILITY INSTALLATION, 8-INCH	EACH	4		
159	CUT, CAP, AND REPLACE EXISTING WATER MAIN FOR UTILITY INSTALLATION, 12-INCH	EACH	2		
160	WATER MAIN INSTALLED IN OPEN CUT, 8-INCH	FOOT	40		
161	WATER MAIN INSTALLED IN OPEN CUT, 12-INCH	FOOT	20		
162	VALVE INSTALLATION - 8-INCH	EACH	1		
163	RESILIENT WEDGE VALVE - 8-INCH	EACH	1		

SCHEDULE OF PRICES
DWM PROJECT NUMBERS 6498A, 6902, 7012 and 7174
P-2017-05

ITEM NO.	DESCRIPTION	UNIT	APPROX. QUANT.	UNIT PRICE	TOTAL PRICE (APPROX. QTY. x UNIT PRICE)
164	8-INCH TO 12-INCH CONNECTION TO 36-INCH - 42-INCH: REMOVE AND REPLACE EXISTING TAPPING CONNECTION SLEEVE	EACH	1		
165	WATER SERVICE TO BE ADJUSTED	EACH	1		
166	CHECK VALVE	EACH	1		
167	SPECIAL FRAME AND LID	EACH	9		
168	RAILROAD TRACK REMOVAL	SQ YD	125		
169	ABANDON MANHOLE	EACH	5		

	TOTAL BASE BID				

ITEM NO. 76 ******** UNDERGROUND STORAGE STRUCTURE ON E 95TH ST

Description

This item includes all costs associated with providing material, equipment and labor costs for installing a precast concrete box culvert with inside dimensions of 4' in height x 12' in width, as specified herein and detailed on the Contract Plans. Work must include temporary bulkheads, when required.

Work Included

This underground storage structure must be constructed to the dimensions shown on the Plans and to the lines and grades established by the Commissioner. The structure shall comply with the requirements included in Section 540 and Article 1042.02 of the Standard Specifications.

The contractor shall submit shop drawings of the details for the storage system for approval by the Commissioner. Shop drawings for precast concrete box culvert sections which satisfy the standard shapes, reinforcement, and detailing of ASTM C 1577 are not required to be reviewed and approved by the Commissioner, as given in Article 540.06 of the Standard Specifications. Weep holes will not be allowed. The structure shall meet the structural loading requirements for the truck traffic loading and fill height shown on the plans.

Shop drawings must be submitted for the precast box culvert details at manhole riser openings, the attachment to the Junction Structure on 95th Street and the closure panel. All items must be structurally connected to the box culvert to prevent differential movement and joints detailed to be watertight.

The work includes excavating, removing and disposing of material, both wet and dry; removing and disposing of pavements, sidewalks, curbs, driveways, abandoned utilities and existing sewers and drains within the limits of excavation for underground storage structure; salvaging manhole and catch basin frames, lids and covers, and inlet frames and grates; furnishing, placing and removing sheeting, bracing and timbering; formwork; pumping, fluming and removing water and sewage; furnishing and placing granular bedding, box culvert, including openings for three manhole risers and the closure panel; connection of the box culvert to the Junction Structure on E. 95th Street; backfilling with trench backfill; and all necessary incidental work for the construction of the underground storage structure complete as specified and shown on the Project Plans, all of which various classes of work must be performed as herein specified.

The Contractor must include in his construction procedure provisions for keeping all excavation free from standing water at all times. This structure is not intended to convey flows until the entire system is on line, but during heavy rains water may rise rapidly in the existing City sewers. The Contractor must be prepared at all times to safeguard workers and protect the work under this Contract from damage by flooding. All temporary dams, flumes, or bulkheads and debris deposited in the City sewer due to this construction must be removed after completion of the work.

The Contractor must install a suitable screen to inhibit debris from entering the sewer system. Any debris deposited in the existing sewers due to this construction must be removed.

The Contractor shall determine the means and methods for supporting trench excavation for underground storage structure. If the Contractor chooses to install steel sheeting the sheeting shall be interlocking steel sheet piling Type PZ22, or equal, with required bracing to support the trench excavation for the structure. Prior to starting excavation the Contractor must submit, for the Commissioner's approval, complete design calculations and working drawings of the proposed sheeting and bracing or other type of support proposed, prepared, signed and sealed by a structural engineer registered in the State of Illinois. Sheeting left in place must be cut off, no less than three (3) feet below finished street grade, after the trench is backfilled to that level.

In general, sheeting and bracing must be removed as the trench or excavation is backfilled, provided such removal does not cause damage to adjacent structures or property, or to the work performed under this Contract. The Contractor will be compensated for sheeting left in place if ordered by the Commissioner.

Inspection and Acceptance

The 4' x 12' box culvert sections must be inspected by the Department of Water Management prior to the final payment to the Contractor. In conjunction with this inspection, the Contractor must furnish a videotape in DVD format of a televised inspection of the interior of the constructed box culvert. The videotape must be recorded under the supervision of the Commissioner. The cost of producing and furnishing the video tape will be incidental to this item of the contract.

Perform videotaping of the box culvert prior to the placement of final wearing surface. The name, phone number, and contact person of the firm which will be performing the videotaping of the sewer must be provided by the Contractor at the pre-construction meeting. Cleaning must be performed prior to videotaping.

The final acceptance of the structure shall be based on the sewer videotape. All deficiencies exposed on the videotape must be corrected by the Contractor within 30 calendar days of notification. All costs incurred by the Contractor to make the required repairs are to be borne solely by the Contractor. Pavement removal, if required, must be in full panel sections and pavement anchors will be required for pavement restoration.

The Contractor is required to re-videotape the box culvert to verify that the deficiencies noted on any previous videotape have been corrected to the satisfaction of the Chicago Department of Water Management. All costs to re-videotape the box culvert, regardless of the number of times required, will be borne solely by the Contractor. Every effort is to be made by the Contractor to correct all deficiencies prior to the placement of the final wearing surface.

If, in the opinion of the Commissioner, the Contractor has delayed in submitting the videotape, the placement of the final wearing surface may be suspended. No time extension will be granted due to this suspension and the Commissioner will be sole judge as to any delays.

Include location maps, legends and descriptions on all videotape submittals. Two copies of each submittal are required.

Measurement

All bypass pumping or dewatering required for the installation of underground storage structures will be paid for under this item.

Furnishing, placing and compacting trench backfill around underground storage structures, as described in Section 502.10 of the Standard Specifications will be paid for under this item. This includes all granular material that may be placed for bedding or as a construction platform.

Manhole risers will not be paid for under this item, but will be paid for under Precast Manhole Risers.

Cast iron manhole frames and lids will not be paid for under this item, but will be paid for under Chicago Standard Manhole Frames and Lids.

Salvaging manhole frames, lids and covers, and inlet frames and grates will be paid for under this item.

Partial removal of a sewer or sewer structure required for installation will be paid under this item.

Method of Payment

This work will be paid for at the contract unit price per foot of UNDERGROUND STRUCTURE ON E 95TH ST. Excavation, bedding and backfilling and removal of surface features will be paid for under this item. Inlets, catch basins, sewers, pavement, curb and gutter, sidewalks and surface restoration will be paid for separately under the applicable pay items.

ITEM NO. 77 ****** UNDERGROUND STORAGE STRUCTURE NO. 1 BETWEEN S AVALON AV AND S WOODLAWN AV**

ITEM NO. 78 ****** UNDERGROUND STORAGE STRUCTURE NO. 2 BETWEEN S WOODLAWN AV AND S UNIVERISTY AV**

ITEM NO. 79 ****** UNDERGROUND STORAGE STRUCTURE NO. 3 BETWEEN S UNIVERSITY AV AND S GREENWOOD AV**

ITEM NO. 80 ****** UNDERGROUND STORAGE STRUCTURE NO. 4 BETWEEN S GREENWOOD AV AND S DOBSON AV**

ITEM NO. 81 ****** UNDERGROUND STORAGE STRUCTURE NO. 5 BETWEEN S DOBSON AV AND S ELLIS AV**

Description

This item includes all costs associated with providing material, equipment and labor costs for installing underground storage structures, as specified herein and detailed on the Contract Plans. Work must include temporary bulkheads, when required.

Work Included

Underground storage structures must be constructed to the dimensions and requirements shown on the Plans and to the lines and grades established by the Commissioner. Storage volumes at each location shall be equal to or greater than the figures given below. The underground storage structures will be constructed using modular concrete units at the approximate dimensions and elevations as given in the plans. The structures shall comply with the applicable portions of Section 1042 of the Standard Specifications and meet Design Loading HL-93 and 2014 AASHTO LRFD Bridge Design Specifications, 7th Edition with 2015 and 2016 Interims.

The Contractor shall submit shop drawings of the details for the storage systems, for approval by the Commissioner. The submittal shall be made in accordance with Articles 1042.03(b) and 105.04 of the Standard Specifications. The supplier shall submit complete drawings and design calculations, signed and sealed by an Illinois Licensed Structural Engineer.

Alternative means of providing the noted storage volume within the vertical range of elevations for the tanks within the existing greenspace, with the sewer connections to the existing system shown in the plans, with the floor freely draining to the outfall at 1% minimum slope, with a sump and a check valve, and also meeting the loading and structural design requirements as given above, may be submitted for approval by the Commissioner.

The work includes excavating, removing and disposing of material, both wet and dry for underground storage structures, including bedding, concrete pads, sumps and collection channels; removing and disposing of pavements, sidewalks, curbs, driveways, abandoned utilities and existing sewers and drains within the limits of excavation for underground storage structures, concrete pads, sumps and collection channels; salvaging manhole and catch basin frames, lids and covers, and inlet frames and grates; furnishing, placing and removing sheeting, bracing and timbering; formwork; pumping, fluming

and removing water and sewage; furnishing and placing bedding, concrete, reinforcement steel, mortar, brick, granular embedment, fittings, ladder rungs, and pipe connections; backfilling with trench backfill; clearing in accordance with applicable portions of Section 201 of the Standard Specifications; and all necessary incidental work for the construction of the underground storage structures, concrete pads, sumps and collection channels complete as specified and shown on the Project Plans, all of which various classes of work must be performed as herein specified.

Underground Storage Structure No. 1 between S Avalon Av and S Woodlawn Av
The construction of an underground storage structure in the grassed median along W. 97th Street, between S. Avalon Av. and S. Woodlawn Av., as shown and noted on the Contract Plans. The tank shall be sized to store approximately 38,244 cubic feet.

Underground Storage Structure No. 2 between S Woodlawn Av and S University Av
The construction of an underground storage structure in the grassed median along W. 97th Street, between S. Woodlawn Av. and S. University Av., as shown and noted on the Contract Plans. The tank shall be sized to store approximately 38,244 cubic feet.

Underground Storage Structure No. 3 between S University Av and S Greenwood Av
The construction of an underground storage structure in the grassed median along W. 97th Street, between S. University Av. and S. Greenwood Av., as shown and noted on the Contract Plans. The tank shall be sized to store approximately 38,244 cubic feet.

Underground Storage Structure No. 4 between S Greenwood Av and S Dobson Av
The construction of an underground storage structure in the grassed median along W. 97th Street, between S. Greenwood Av. and S. Dobson Av., as shown and noted on the Contract Plans. The tank shall be sized to store approximately 38,244 cubic feet.

Underground Storage Structure No. 5 between S Dobson Av and S Ellis Av
The construction of an underground storage structure in the grassed median along W. 97th Street, west of S. Dobson Av., as shown and noted on the Contract Plans. The tank shall be sized to store approximately 31,538 cubic feet.

At all proposed connections leading to the underground storage structures, the Contractor must verify the dry-weather water level in the existing sewer at the location proposed for connection for the underground storage structure outfall sewers. If the level is above the invert of the proposed outfall from the underground storage tank, this shall be reported to the Commissioner. This shall be done at the outset of excavation work required for each of the structures.

The Contractor must include in his construction procedure provisions for maintaining flows at all times in this sewer, and preventing flooding of the excavation from these sewers. During heavy rains water may rise rapidly in the existing City sewer. The Contractor must be prepared at all times to safeguard workers and protect the work under this Contract from damage by flooding. All temporary dams, flumes, or bulkheads and debris deposited in the City sewer due to this construction must be removed after completion of the work.

The Contractor must use care to prevent damage to the existing sewer and any damage must be repaired or replaced by the Contractor without cost to the City. Shop drawings must be submitted showing means of internal support/protection of existing sewer facilities. The Contractor must install a suitable screen to inhibit debris from entering the sewer system. Any debris deposited in the existing sewers due to this construction must be removed.

The Contractor must include in his construction procedure provisions for keeping all excavation free from standing water at all times.

The structures specified must be constructed to the dimensions shown on the Plans and to the lines and grades established by the Commissioner.

The Contractor shall determine the means and methods for supporting trench excavation for underground storage structures. If the Contractor chooses to install steel sheeting the sheeting shall be interlocking steel sheet piling Type PZ22, or equal, with required bracing to support the trench excavation for the structure. Prior to starting excavation the Contractor must submit, for the Commissioner's approval, complete design calculations and working drawings of the proposed sheeting and bracing or other type of support proposed, prepared, signed and sealed by a structural engineer registered in the State of Illinois. Sheeting left in place must be cut off, no lower than three (3) feet below finished street grade, after the trench is backfilled to that level.

In general, sheeting and bracing must be removed as the trench or excavation is backfilled, provided such removal does not cause damage to adjacent structures or property, or to the work performed under this Contract. The Contractor will be compensated for sheeting left in place if ordered by the Commissioner.

Materials and Workmanship

All concrete used in this work must be in accordance with applicable portions of Section 503 and 1020 of the Standard Specifications.

All metals used in this work must be in accordance with applicable portions of Article 1006 of the IDOT Standard Specifications.

Reinforcement steel bars must be in accordance with "Reinforcement Bars, Epoxy Coated."

All excavation and backfill must be in accordance with applicable portions of Section 502 of the Standard Specifications.

Measurement

Cast-in-place concrete pad, including bedding, the sump and collection channel at each tank will be paid for under this item.

All concrete used in construction of the underground storage structures will be paid for under this item.

Reinforcement steel used in the construction of any cast-in-place concrete needed for the underground storage structures will be paid for under this item.

Granular backfill material placed within the excavation for the underground storage structures will be paid for under this item.

All bypass pumping or dewatering required for the installation of underground storage structures will be paid for under this item.

Furnishing, placing and compacting trench backfill around underground storage structures, as described in Section 502.10 of the Standard Specifications will be paid for under this item. This includes all granular material that may be placed as a construction platform below the concrete slab and collection channel. This also includes all material below the top of the underground storage structures that will also be used for embedment and cover of the sewers and drain connections installed outside the underground storage structures.

All granular material needed for support of the inlets and ductile iron pipe sewer placed above the underground storage structures will be paid for under this item. All unclassified embankment placed on top of the structures to fill up to the bottom of the proposed 6” layer of topsoil placed in the greenspace will be paid for under this item.

Ladder rungs for the several access locations with frame and lid will be included and paid for under this item. Cast iron manhole frames and lids will not be paid for under this item, but will be paid for under Chicago Standard Manhole Frames and Lids.

Salvaging manhole frames, lids and covers, and inlet frames and grates will be paid for under this item.

Partial removal of a sewer or sewer structure required for installation will be paid under this item.

Method of Payment

This work will be paid for at the contract unit price per lump sum of UNDERGROUND STORAGE STRUCTURE NO. 1 BETWEEN S AVALON AV AND S WOODLAWN AV; UNDERGROUND STORAGE STRUCTURE NO. 2 BETWEEN S WOODLAWN AV AND S UNIVERSITY AVE; UNDERGROUND STORAGE STRUCTURE NO. 3 BETWEEN S UNIVERSITY AV AND S GREENWOOD AVE; UNDERGROUND STORAGE STRUCTURE NO. 4 BETWEEN S GREENWOOD AV AND S DOBSON AV; or UNDERGROUND STORAGE STRUCTURE NO. 5 BETWEEN S DOBSON AV AND S ELLIS AV. Removal of existing surface features, excavation and offsite disposal, bedding, concrete pad, placement of storage units, and backfilling will be paid for under this item. Inlets, catch basins, sewers, pavement, curb and gutter, sidewalks and surface restoration will be paid for separately under the applicable pay items.